METROLINK®

ENGINEERING STANDARDS FOR PRECAST/PRESTRESSED CONCRETE DOUBLE BOX BEAM BRIDGES

33" DOUBLE BOX BEAMS ON PRECAST CONCRETE CAPS WITH DRIVEN STEEL H-PILE FOUNDATIONS

DRAWING INDEX

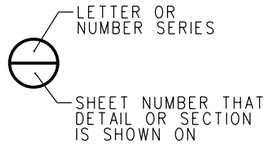

SHEET SHOWING SECTION OR DETAIL CUT

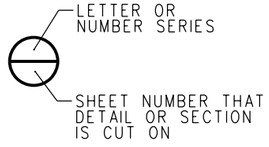

SHEET SHOWING SECTION OR DETAIL

SECTION OR DETAIL DESIGNATION

NOTE:

1. "_" INDICATES SECTION OR DETAIL IS CUT AND SHOWN ON THE SAME SHEET.

REV.	DATE	DESCRIPTION	DES.	ENG.
X	XX-XX-XX	REVISION	XX	XX

DRAWN BY: HDR DATE: 03/31/2011

ASSISTANT DIRECTOR: STANDARDS & DESIGN

DIRECTOR OF ENGINEERING AND CONSTRUCTION

METROLINK®
SOUTHERN CALIFORNIA REGIONAL RAIL AUTHORITY
ONE GATEWAY PLAZA, 12TH FLOOR, L. A., CA. 90012

ENGINEERING STANDARDS

TITLE SHEET
PRECAST/PRESTRESSED CONCRETE
DOUBLE BOX BEAM BRIDGES

STANDARD: 6001
SCALE: NTS
REVISION: –
SHEET: 1 OF 26
CADD FILE: ES6001-01

CONTROLLING DESIGN LOAD EFFECTS FOR PRECAST/PRESTRESSED CONCRETE DOUBLE BOX BEAM

				ESTIMATED PRESTRESSING									ALLOWABLE STRESSES									ULTIMATE CAPACITY			
													Maximum Service Moments					Top Fiber Service Load Stresses		Bottom Fiber Service Load Stresses					
													Dead	Live	Impact	Centrifugal	Total								
	NOMINAL SPAN	"BL"	"SL"	Design Bed Pretension	Elastic Shortening Loss	Total Long-term Prestress Loss	Initial Pretress	Final Prestress	Area of Prestressing Steel Provided	Initial Total Prestressing Force	Final Total Prestressing Force	Eccentricity of Total Prestressing Force from Centroid of Beam													
				f_{pBed} (ksi)	Δf_{ES} (ksi)	Δf_{Total} (ksi)	f_{pi} (ksi)	f_{pf} (ksi)	A_p (in^2)	P_i (k)	P_f (k)	e_p (in)	M_D (k-ft)	M_L (k-ft)	M_I (k-ft)	M_{CF} (k-ft)	M_{Total} (k-ft)	Allowable (psi)	Calculated (psi)	Allowable (psi)	Calculated (psi)	M_u (k-ft)	$\varnothing M_n$ (k-ft)	V_u (k)	$\varnothing V_n$ (k)
	20'-2"	20'-0"	18'-11"	200.0	7.4	31.4	192.6	168.6	3.04	586	513	14.0	141	408	211	61	821	2400 C	599 C	0T	193 C	1730	2180	383	460
	22'-2"	22'-0"	20'-11"	200.0	8.4	33.6	191.6	166.4	3.47	665	577	14.0	174	495	244	74	987	2400 C	733 C	0T	163 C	2072	2419	413	464
	24'-2"	24'-0"	22'-11"	200.0	9.3	35.8	190.7	164.2	3.91	746	642	14.0	210	582	274	87	1153	2400 C	870 C	0T	131 C	2413	2656	440	467
	26'-2"	26'-0"	24'-11"	200.0	10.3	38.2	189.7	161.8	5.21	988	843	11.7	248	670	302	100	1320	2400 C	1112 C	0T	200 C	2755	3115	457	488
*	28'-0"	27'-10"	26'-9"	200.0	11.2	40.3	188.8	159.7	5.64	1065	901	11.9	286	750	326	113	1475	2400 C	1237 C	0T	173 C	3070	3343	474	497
	30'-2"	30'-0"	28'-11"	200.0	13.1	44.7	186.9	155.3	6.51	1217	1011	12.2	337	852	357	128	1674	2400 C	1380 C	0T	217 C	3472	3794	500	500
	32'-2"	32'-0"	30'-11"	200.0	14.0	46.6	186.0	153.4	6.94	1291	1065	12.3	385	952	385	143	1865	2400 C	1543 C	0T	150 C	3859	4016	517	517
*	33'-0"	32'-10"	31'-9"	200.0	14.1	48.4	185.9	151.6	8.25	1534	1251	10.9	406	993	397	149	1945	2400 C	1713 C	0T	269 C	4020	4418	526	526
	34'-2"	34'-0"	32'-11"	200.0	14.1	48.1	185.9	151.9	8.25	1534	1253	10.9	437	1051	412	158	2058	2400 C	1824 C	0T	165 C	4247	4418	537	537
*	35'-0"	34'-10"	33'-9"	200.0	14.0	49.2	186.0	150.8	8.68	1615	1309	10.9	459	1093	423	164	2139	3000 C	1905 C	0T	170 C	4409	4700	544	581

NOTES:
1. "BL" - OUT TO OUT BEAM LENGTH
   "SL" - SPAN LENGTH CENTER TO CENTER OF BEARINGS
2. * DENOTES STANDARD SPAN
3. FOR SERVICE LOAD STRESSES, "T" IS TENSION AND "C" IS COMPRESSION.
4. TABLE VALUES OF MAXIMUM SERVICE MOMENTS AND CALCULATED STRESSES ARE PROVIDED FOR THE LOCATION OF MAXIMUM SERVICE MOMENT ALONG THE LENGTH OF THE SPAN, TYPICALLY AT OR NEAR MIDSPAN.
5. TABLE VALUES OF MAXIMUM ULTIMATE MOMENT DEMAND AND FACTORED MOMENT CAPACITY ARE PROVIDED FOR THE LOCATION OF MAXIMUM ULTIMATE MOMENT ALONG THE LENGTH OF THE SPAN, TYPICALLY AT OR NEAR MIDSPAN. THESE VALUES MAY NOT REPRESENT THE CRITICAL CAPACITY TO DEMAND RATIO FOR MOMENT ALONG THE ENTIRE LENGTH OF THE SPAN.
6. TABLE VALUES OF MAXIMUM ULTIMATE SHEAR DEMAND AND FACTORED SHEAR CAPACITY ARE PROVIDED AT h/2 (16½") FROM CENTERLINE OF BEARING. THESE VALUES MAY NOT REPRESENT THE CRITICAL CAPACITY TO DEMAND RATIO FOR SHEAR ALONG THE ENTIRE LENGTH OF THE SPAN.

DESIGN NOTES:

1. PRECAST/PRESTRESSED CONCRETE DOUBLE BOX BEAM AND PRECAST CONCRETE CAP DESIGN HAVE BEEN PERFORMED IN ACCORDANCE WITH THE 2009 AMERICAN RAILWAY ENGINEERING AND MAINTENANCE-OF-WAY ASSOCIATION (AREMA) MANUAL FOR RAILWAY ENGINEERING, CHAPTER 8: CONCRETE STRUCTURES AND FOUNDATIONS, PART 2: REINFORCED CONCRETE DESIGN AND PART 17: PRESTRESSED CONCRETE.

2. BEARING DESIGN HAS BEEN PERFORMED FOR RAILROAD LOADING AND THERMAL EFFECTS IN ACCORDANCE WITH THE 2009 AREMA MANUAL FOR RAILWAY ENGINEERING, CHAPTER 15: STEEL STRUCTURES, PART 10: BEARING DESIGN, EXCEPT AS MODIFIED BELOW FOR RANDOM ORIENTED FIBER (ROF) REINFORCED ELASTOMERIC BEARING PADS. SITE SPECIFIC DESIGN VERIFICATION IS REQUIRED FOR SEISMIC EFFECTS.
   A. DESIGN OF ROF BEARING PADS AS PLAIN (UNREINFORCED), RECTANGULAR ELASTOMERIC BEARING PADS PER AREMA WITH MODIFICATIONS AS LISTED IN B THROUGH E.
   B. MODIFYING FACTOR, K=1.0
   C. ALLOWABLE COMPRESSIVE STRESS, $fa \leq 1000+100(S) \leq 1500$ psi
   D. ALLOWABLE COMPRESSIVE DEFLECTION, $\delta c \leq 0.15(T) \leq 0.2"$
   E. ALLOWABLE ROTATION, $L(\alpha_L) + W(\alpha_W) \leq 0.30(T) \leq 0.4"$
      WHERE "T" IS THE THICKNESS OF THE BEARING PAD.

3. HANDRAIL, STEEL GRATING WALKWAY AND ASSOCIATED SUPPORTS AND CONNECTIONS HAVE BEEN DESIGNED IN ACCORDANCE WITH THE 2009 AREMA MANUAL FOR RAILWAY ENGINEERING, CHAPTER 15: STEEL STRUCTURES, PART 1: DESIGN AND PART 8: MISCELLANEOUS.

4. PRECAST CONCRETE SUBSTRUCTURE COMPONENTS, CAST-IN-PLACE CONCRETE COLLARS, STEEL PILING AND BRACING, CONNECTIONS BETWEEN STEEL PILING AND CAPS AND CONNECTIONS BETWEEN DOUBLE BOX BEAMS AND CAPS ARE PREFERRED DETAILS FOR SUBSTRUCTURES SUPPORTING STANDARD DOUBLE BOX BEAM SUPERSTRUCTURES. DESIGN SHALL BE VERIFIED FOR RAILROAD LOADING AND SITE-SPECIFIC SEISMIC EFFECTS PER THE SCRRA DESIGN CRITERIA MANUAL AT EACH LOCATION PROPOSED FOR USE.

5. DESIGN OF STANDARD DOUBLE BOX BEAMS IS VALID FOR 6" MAXIMUM OFFSET OF CENTERLINE TRACK TO CENTERLINE OF LONGITUDINAL GAP BETWEEN ADJACENT BEAMS. THE 6" MAXIMUM OFFSET IS APPLICABLE FOR BOTH TANGENT AND CURVED TRACKS.

6. DESIGN OF STANDARD DOUBLE BOX BEAMS IS VALID FOR TIMBER TIES OR CONCRETE TIES WITH A MINIMUM LENGTH OF 8'-3" AND THE FOLLOWING DEPTHS OF MATERIAL FROM TOP OF BEAM TO BOTTOM OF TIE:
   A. 12" MINIMUM DEPTH BELOW TIE
   B. 16" MAXIMUM DEPTH BELOW TIE
   DEPTH BELOW THE TIE INCLUDES THE THICKNESS OF BALLAST AND HOT MIXED ASPHALT (HMA) PAVING, IF APPLICABLE (FOR EXAMPLE, 4" HMA AND 8" BALLAST WOULD MAKE UP 12" DEPTH BELOW THE TIE). THE THICKNESS OF BALLAST TO BE INCLUDED IN THE DEPTH BELOW THE TIE SHALL NOT BE LESS THAN 8".

7. FOR CURVED TRACK, DESIGN OF STANDARD DOUBLE BOX BEAMS IS VALID FOR THE RANGE OF TRAIN SPEED AND DEGREE OF CURVE SHOWN IN THE TABLE TITLED "MAXIMUM ALLOWABLE DEGREE OF CURVE FOR DESIGN SPEED", THIS SHEET.

8. PRECAST/PRESTRESSED CONCRETE DOUBLE BOX BEAM DESIGN LOADING (VALUES GIVEN FOR A SINGLE BEAM):
   A. DEAD LOAD, D:
      I. SELF-WEIGHT OF DOUBLE BOX BEAMS, Dsw = 1,390 LB/FT (NOT INCLUDING END DIAPHRAGMS)
      II. BALLAST, HMA AND TIES, Db (TOP OF BEAM TO TOP OF TIE):
         MINIMUM, 19" TOTAL DEPTH, Dbmin = 1,235 LB/FT
         MAXIMUM, 24" TOTAL DEPTH, Dbmax = 1,560 LB/FT
      III. TRACK (RAIL & OTM), Dt = 112 LB/FT
      IV. CURB, WALKWAY AND HANDRAIL, Dc = 185 LB/FT
   B. COOPER E-80 LIVE LOAD, L
   C. IMPACT, I, BASED ON SPAN LENGTH CENTER-TO-CENTER OF BEARINGS, "SL", EXPRESSED IN % OF L:
      FOR 14' < "SL" ≤ 127', $I = 225 / \sqrt{("SL")}$
   D. CENTRIFUGAL FORCE, CF, RESULTING IN A VERTICAL FORCE EQUAL TO 15% OF L

9. CONTROLLING LOADING EFFECTS FOR EACH LIMIT STATE INVESTIGATED ARE PROVIDED IN THE TABLE TITLED "CONTROLLING DESIGN LOAD EFFECTS FOR PRECAST/PRESTRESSED CONCRETE DOUBLE BOX BEAM", THIS SHEET.

10. REQUIRED COMPRESSIVE STRENGTHS OF CONCRETE AT RELEASE, f'ci, AND AT 28 DAYS, f'c, ARE PROVIDED FOR EACH DESIGN. MINIMUM f'ci SHALL BE 4000 PSI AT RELEASE AND MINIMUM f'c SHALL BE 6000 PSI AT 28 DAYS.

11. STRAND PATTERN FOR DOUBLE BOX BEAM CONSISTS OF 0.6" DIA. SEVEN-WIRE HIGH-STRENGTH LOW-RELAXATION STRANDS AT 2" MINIMUM SPACING. FABRICATORS MAY BE ALLOWED TO SUBSTITUTE AN ALTERNATE STRAND SIZE, SPACING AND/OR PATTERN THAT PROVIDES THE SAME TOTAL AREA OF PRESTRESSING STEEL AND THE SAME ECCENTRICITY OF PRESTRESSING FORCE FROM THE CENTROID OF THE BEAM CROSS-SECTION. SEE THE SPECIFICATIONS FOR ALTERNATE STRAND ARRANGEMENT SUBMITTAL REQUIREMENTS.

12. PRECAST/PRESTRESSED CONCRETE DOUBLE BOX BEAM DESIGNS ARE PROVIDED AT INCREMENTS OF OUT-TO-OUT BEAM LENGTH, "BL", BETWEEN 20' AND 35'. SPAN LENGTH CENTER-TO-CENTER OF BEARINGS, "SL" IS 1'-1" LESS THAN "BL" FOR DOUBLE BOX BEAMS. FOR ACTUAL VALUES OF "BL" BETWEEN THOSE LENGTHS PROVIDED, USE THE DESIGN FOR THE NEXT LARGER "BL" (FOR EXAMPLE, THE STANDARD 27'-10" OUT-TO-OUT BEAM LENGTH WOULD USE THE NUMBER OF STRANDS, STRAND PATTERN AND REQUIRED CONCRETE STRENGTHS FOR THE 28' DESIGN).

13. CALCULATIONS FOR DESIGN OF PRECAST/PRESTRESSED CONCRETE DOUBLE BOX BEAMS AND PRECAST CONCRETE CAPS HAVE BEEN SIGNED AND SEALED BY A LICENSED PROFESSIONAL CIVIL ENGINEER IN THE STATE OF CALIFORNIA AND ARE KEPT ON FILE AT SCRRA HEADQUARTERS.

MAXIMUM ALLOWABLE DEGREE OF CURVE FOR DESIGN SPEED

MAX DESIGN SPEED (mph)	ALLOWABLE DEGREE OF CURVE
20	14° 00'
25	13° 33'
30	13° 13'
35	11° 21'
40	8° 29'
45	6° 42'
50	5° 25'
60	3° 51'
70	2° 50'
80	2° 04'
90	1° 35'
100	1° 17'
110	1° 01'

NOTE:
ALLOWABLE DEGREE OF CURVE SHOWN IN THE TABLE MAY NOT BE A PRACTICAL DESIGN VALUE. VALUES BASED SOLELY ON THE CENTRIFUGAL FORCE REQUIRED TO PRODUCE AN INCREASE OF 15% VERTICAL LIVE LOAD ON BEAMS.

REV.	DATE	DESCRIPTION	DES.	ENG.
X	XX-XX-XX	REVISION	XX	XX

DRAWN BY: HDR DATE: 03/31/2011

ASSISTANT DIRECTOR: STANDARDS & DESIGN

DIRECTOR OF ENGINEERING AND CONSTRUCTION

METROLINK®
SOUTHERN CALIFORNIA REGIONAL RAIL AUTHORITY
ONE GATEWAY PLAZA, 12TH FLOOR, L. A., CA. 90012

ENGINEERING STANDARDS

DESIGN NOTES
PRECAST/PRESTRESSED CONCRETE
DOUBLE BOX BEAM BRIDGES

STANDARD 6001
SCALE: NTS
REVISION –
SHEET 2 OF 26
CADD FILE: ES6001-02

CONSTRUCTION NOTES:

PRECAST CONCRETE MEMBERS AND PRECAST/PRESTRESSED CONCRETE BEAMS:

PRECAST CONCRETE MEMBERS AND PRECAST/PRESTRESSED CONCRETE BEAMS SHALL MEET THE REQUIREMENTS OF SCRRA STANDARD SPECIFICATIONS SECTION 34 80 43: PRECAST AND PRESTRESSED CONCRETE FOR RAILROAD BRIDGES. MATERIALS SHALL NOT BE ORDERED AND FABRICATION SHALL NOT COMMENCE PRIOR TO ACCEPTANCE OF SHOP DRAWINGS BY SCRRA. MEMBERS AND BEAMS THAT DO NOT MEET THE REQUIRED SPECIFICATIONS WILL BE REJECTED. REJECTED MEMBERS AND BEAMS SHALL BE REPLACED BY THE CONTRACTOR AT NO ADDITIONAL COST TO SCRRA. MEMBERS AND BEAMS THAT HAVE BEEN DELIVERED AND ARE THEN REJECTED SHALL BE REMOVED FROM SCRRA PROPERTY AT NO ADDITIONAL COST TO SCRRA.

PILING:

STEEL BEARING PILES SHALL MEET THE REQUIREMENTS OF SCRRA STANDARD SPECIFICATIONS SECTION 34 80 21: PILING. PILES SHALL BE DRIVEN TO A MINIMUM ALLOWABLE COMPRESSIVE LOAD CAPACITY OF 150 TONS PER THE DYNAMIC FORMULA IN THE STANDARD SPECIFICATIONS OR TO PRACTICAL REFUSAL, IF POSSIBLE, WITHOUT DAMAGING THE PILES. MINIMUM PENETRATION SHALL BE 15 FEET BELOW NATURAL GROUND OR FINISHED GROUND LINE, WHICHEVER IS LOWER. PILES SHALL BE DRIVEN WITHIN 3" OF PLAN LOCATION AT CUTOFF, WITHIN 1/4" PER FOOT OF SPECIFIED BATTER LINE FOR BATTERED PILING AND WITHIN 1/4" PER FOOT OF VERTICAL FOR PLUMB PILING. PILES THAT DO NOT MEET THE REQUIRED TOLERANCES SHALL BE PULLED AND REDRIVEN OR CUTOFF AND REPLACED. CUTOFF PILES TO SPECIFIED ELEVATIONS AND PROPERLY PREPARE THE CUTOFF ENDS FOR WELDING. PILES SHALL NOT BE PULLED INTO POSITION FOR WELDING TO CAPS UNLESS OTHERWISE APPROVED BY SCRRA. A FULL PILE REPORT PER THE SPECIFICATIONS, INCLUDING DRIVING RECORDS AND ESTIMATED ALLOWABLE CAPACITIES FOR EACH PILE, SHALL BE PROVIDED TO SCRRA.

PLACING PRECAST CAPS:

PRECAST CAPS SHALL BE PLACED IN THE PROPER LOCATIONS AND SECURED PRIOR TO WELDING PILES TO PILE PLATES EMBEDDED IN CAPS. PROPER LOCATION OF PRECAST CAPS SHALL BE DETERMINED USING CONSTRUCTION SURVEYING WITH VERIFIED CONTROL AND CHECKED WITH TAPE MEASUREMENTS FROM A KNOWN REFERENCE POINT. AS-BUILT DIMENSIONS BETWEEN EMBEDDED PIPES IN EACH END OF BEAMS AND BETWEEN STEEL RODS (AR1) EMBEDDED IN CAPS IN ADJACENT BENTS SHALL BE CHECKED PRIOR TO WELDING PILES TO CAPS.

FIELD WELDING CAPS AND BRACING:

PILES SHALL BE WELDED TO PILE PLATES, FOLLOWED BY WELDING ANGLE BRACING TO THE INSIDE OF PILE FLANGES AS SHOWN ON THE DRAWINGS. WELDING SHALL MEET THE REQUIREMENTS OF AWS D1.5 BRIDGE WELDING CODE. WELDING SHALL BE ACCOMPLISHED USING THE SMAW OR FCAW PROCESS. WELDING ELECTRODES SHALL BE E7018 FOR SMAW OR E70T-5 FOR FCAW. WELDERS SHALL POSSESS VALID QUALIFICATIONS FOR THE TYPES OF WELDS AND WELDING POSITIONS REQUIRED.

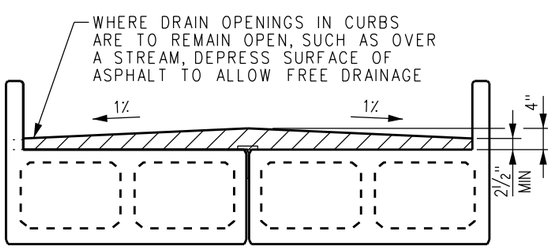

SECTION A
SCALE: NONE

NOTE:
HMA CROSS SLOPE SIMILAR ON BRIDGE APPROACH.

INSTALLING WING WALLS:

ADJOINING SURFACES OF END CAP AND WING WALL SHALL BE COATED WITH GROUT. WHILE GROUT IS STILL PLIABLE, POSITION WING WALL OVER THREADED RODS AND HOLD IN PLACE, ADD WASHER W1 AND HEX NUT TO BOLTS, TIGHTEN NUTS AND TACK WELD NUTS TO WASHER. REPAIR DAMAGED GALVANIZED SURFACES.

CAST-IN-PLACE CONCRETE:

ALL CONCRETE MATERIALS, PLACEMENT AND WORKMANSHIP SHALL CONFORM TO SCRRA STANDARD SPECIFICATIONS SECTION 34 80 41: STRUCTURAL CONCRETE FOR RAILROAD AND CIVIL WORKS. REINFORCING STEEL MATERIALS AND PLACEMENT SHALL CONFORM TO SCRRA STANDARD SPECIFICATIONS SECTION 34 80 42: REINFORCEMENT FOR RAILROAD AND CIVIL WORKS. MINIMUM 28-DAY CONCRETE COMPRESSIVE STRENGTH SHALL BE 4000 PSI. THE PORTION OF PILING TO BE ENCASED IN CONCRETE SHALL BE CLEANED OF ALL DIRT, OIL AND GREASE AND ALL LOOSE SCALE AND RUST BEFORE CONCRETE IS PLACED TO PROVIDE ADEQUATE BOND.

PAINTING:

PAINTING SHALL BE IN ACCORDANCE WITH SCRRA STANDARD SPECIFICATIONS SECTION 34 80 61: PAINTING AND PROTECTIVE COATINGS FOR BRIDGES. THE EXPOSED PORTION OF PILE PLATES, PILING BETWEEN THE PILE PLATES AND CONCRETE COLLARS OR GROUND LINE, ANGLE BRACING AND ANY OTHER NON-GALVANIZED EXPOSED STEEL SHALL BE CLEANED PER SSPC SP 6 "COMMERCIAL BLAST CLEAN" AND PAINTED USING SYSTEM #19.

INSTALLING BEARING PADS:

RANDOM ORIENTED FIBER ELASTOMERIC BEARING PADS SHALL MEET THE REQUIREMENTS OF SCRRA STANDARD SPECIFICATIONS SECTION 34 80 43: PRECAST AND PRESTRESSED CONCRETE FOR RAILROAD BRIDGES. BEARING PADS SHALL BE ADHERED TO PRECAST CAPS AND PRECAST/PRESTRESSED CONCRETE BEAMS USING AN ADHESIVE RECOMMENDED BY THE BEARING PAD MANUFACTURER AND APPROVED BY SCRRA. BEARING AREAS ON CAPS AND BEAMS SHALL BE ABRASIVE BLAST CLEANED TO REMOVE ALL FORM OIL AND CURING AGENTS AND SHALL BE CLEANED TO A DUST-FREE CONDITION. ONCE BEARING AREAS HAVE BEEN ADEQUATELY CLEANED, APPLY A LIGHT SEAL COAT OF ADHESIVE TO CONCRETE SURFACE AND ALLOW TO DRY. COAT CONTACT SURFACES OF CONCRETE AND BEARING PADS WITH ADHESIVE, PLACE PADS ON CONCRETE SURFACE AND HOLD IN THE PROPER LOCATION UNTIL THE ADHESIVE HAS ATTAINED INITIAL SET.

ERECTION OF BEAMS:

BEAMS SHALL BE SET IN THE PROPER LOCATION, TAKING CARE NOT TO DAMAGE CONCRETE MEMBERS. AFTER BEAMS HAVE BEEN SET IN FINAL POSITION, LIFTING LOOPS SHALL BE TORCHED OFF 1" BELOW DECK SURFACE AND REMAINING HOLES FILLED WITH EPOXY GROUT.

DECK PLATES:

DECK PLATES MAY BE ADJUSTED AND TRIMMED AS NEEDED TO PROVIDE A TIGHT FIT. DUE TO LOCAL CONDITIONS, DECK PLATES AT JOINTS MAY NEED TO BE WELDED. IF WELDING DECK PLATES IS REQUIRED, REMOVE SCALE AND REPAIR GALVANIZED SURFACES AFTER COOLING.

WALKWAYS:

SIDEWALK BRACKETS SHALL BE ERECTED PLUMB AND IN-LINE. FINISHED WALKWAY SURFACE SHALL BE EVEN, WITH ANY ABRUPT CHANGES IN ELEVATION LIMITED TO 1/4" OR LESS. ATTACH WALKWAY GRATING TO SIDEWALK BRACKETS AS SHOWN ON THE DRAWINGS. GRATING PANEL LAYOUT SHALL BE ADJUSTED TO MINIMIZE DISTANCE THAT PANELS EXTEND ACROSS BRIDGE JOINTS. TRIM GRATING AS REQUIRED AND REPAIR DAMAGED GALVANIZED SURFACES.

HANDRAIL:

HANDRAIL POSTS, BRACES AND STRUTS SHALL BE GALVANIZED 2"x2" 20F12 UNISTRUT "TELESPAR". CABLE RAILS SHALL BE 5/16" DIA, 7x19 GALVANIZED AIRCRAFT CABLE. INTERIOR HANDRAIL TERMINATIONS SHALL BE PROVIDED AT EVERY TWO SPANS. SAFETY CHAIN SHALL BE USED FOR RAILS BETWEEN INTERIOR CABLE TERMINATIONS. ATTACH HANDRAIL COMPONENTS AS SHOWN ON THE DRAWINGS. REPAIR DAMAGED GALVANIZED SURFACES.

SIGNAL CONDUIT:

A MINIMUM OF TWO SIGNAL CONDUITS SHALL BE PROVIDED INSIDE THE CURB LINE ON EACH SIDE OF THE BRIDGE. CONDUIT SHALL CONSIST OF 4" DIA GALVANIZED STEEL PIPE. CONDUIT BRACKETS SHALL BE USED TO HOLD CONDUIT IN PLACE AND SHALL BE PLACED TO MISS DECK PLATES AND SIDEWALK BRACKETS. SPACING OF CONDUIT BRACKETS SHALL NOT EXCEED 6 FEET. INSTALL CONDUIT BRACKETS USING ADHESIVE ANCHORS. ADHESIVE ANCHORS SHALL BE HILTI HVA SYSTEM OR APPROVED EQUAL. FIELD DRILL 7/16" DIA x 3 1/2" HOLE INTO CONCRETE CURB, INSTALL HVU ADHESIVE CAPSULE AND 3/8" DIA x 5" THREADED ROD PER MANUFACTURER'S INSTRUCTIONS. CONDUITS INSTALLED ON BRIDGES WITHOUT HMA SHALL BE RAISED 3/4" TO ALLOW FOR DECK DRAINAGE.

MISCELLANEOUS STEEL AND HARDWARE:

MISCELLANEOUS STEEL ITEMS SHALL BE FABRICATED IN ACCORDANCE WITH SCRRA STANDARD SPECIFICATIONS SECTION 34 80 52: METAL FABRICATIONS FOR RAILROAD BRIDGES. STEEL ACCESSORIES AND HARDWARE SHALL BE GALVANIZED (HOT DIP OR MECHANICALLY ZINC COATED) UNLESS NOTED OTHERWISE.

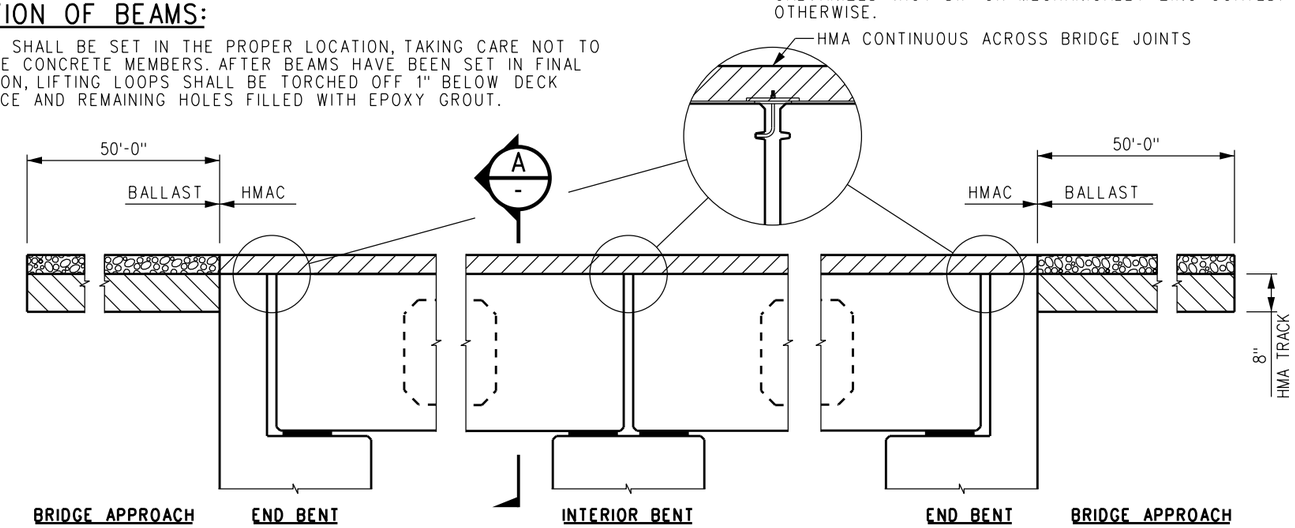

HMA DETAILS
SCALE: 3/4" = 1'-0"

REV.	DATE	DESCRIPTION	DES.	ENG.
A	04-17-13	REVISED HMA DETAILS	AC	NDP

DRAWN BY: A. CARLOS DATE: 04/12/02

ASSISTANT DIRECTOR: STANDARDS & DESIGN

DIRECTOR OF ENGINEERING AND CONSTRUCTION

METROLINK®
SOUTHERN CALIFORNIA REGIONAL RAIL AUTHORITY
ONE GATEWAY PLAZA, 12TH FLOOR, L. A., CA. 90012

ENGINEERING STANDARDS

CONSTRUCTION NOTES AND HMA DETAILS
PRECAST/PRESTRESSED CONCRETE
DOUBLE BOX BEAM BRIDGES

STANDARD 6001
SCALE: AS NOTED
REVISION A
SHEET 3 OF 26
CADD FILE: ES6001-03

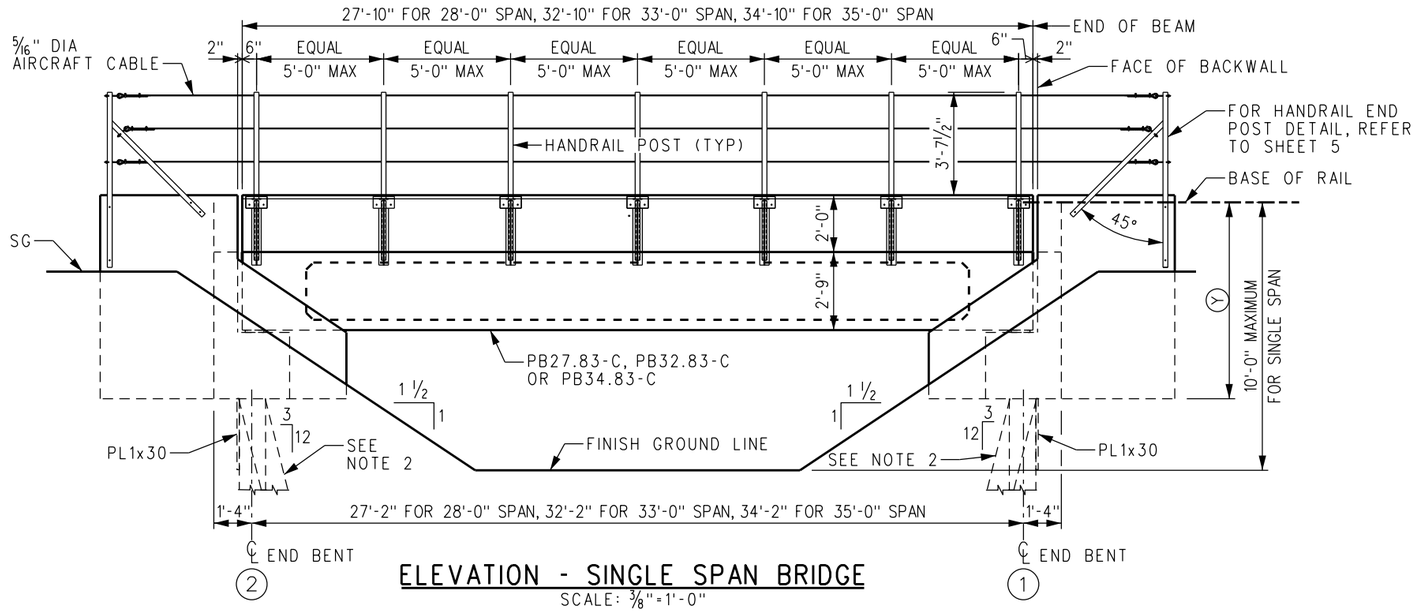

ELEVATION - SINGLE SPAN BRIDGE

SCALE: 3/8"=1'-0"

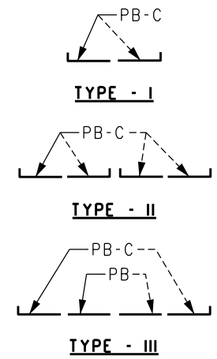

BEAM ARRANGEMENT DIAGRAMS

SCALE: NONE
PB DENOTES BEAM WITHOUT CURB.
PB-C DENOTES BEAM WITH CURB.

LIFTING WEIGHTS	
BEAM MARK	WEIGHT IN TONS
PB34.83-C	26.9
PB34.83	24.3
PB32.83-C	25.3
PB32.83	22.9
PB27.83-C	21.5
PB27.83	19.4

DOUBLE BENT REQUIREMENTS	
LINEAL FEET OF BRIDGE	MIN NO OF DOUBLE BENTS REQUIRED
UP TO 198'	NONE
199' TO 396'	ONE
397' TO 594'	TWO
595' TO 792'	THREE

NOTES:

1. "Y" IS THE DISTANCE FROM BASE OF RAIL TO PILE CUTOFF. FOR DESIGN ELEVATIONS, "Y" SHALL BE ESTABLISHED IN COORDINATION WITH SCRRA DIRECTOR OF ENGINEERING AND CONSTRUCTION.
2. WHEN NECESSARY TO CLEAR AN EXISTING PILE, PILES BATTERED IN THE DIRECTION OF THE TRACK MAY ALSO BE BATTERED SLIGHTLY IN THE DIRECTION NORMAL TO THE TRACK.

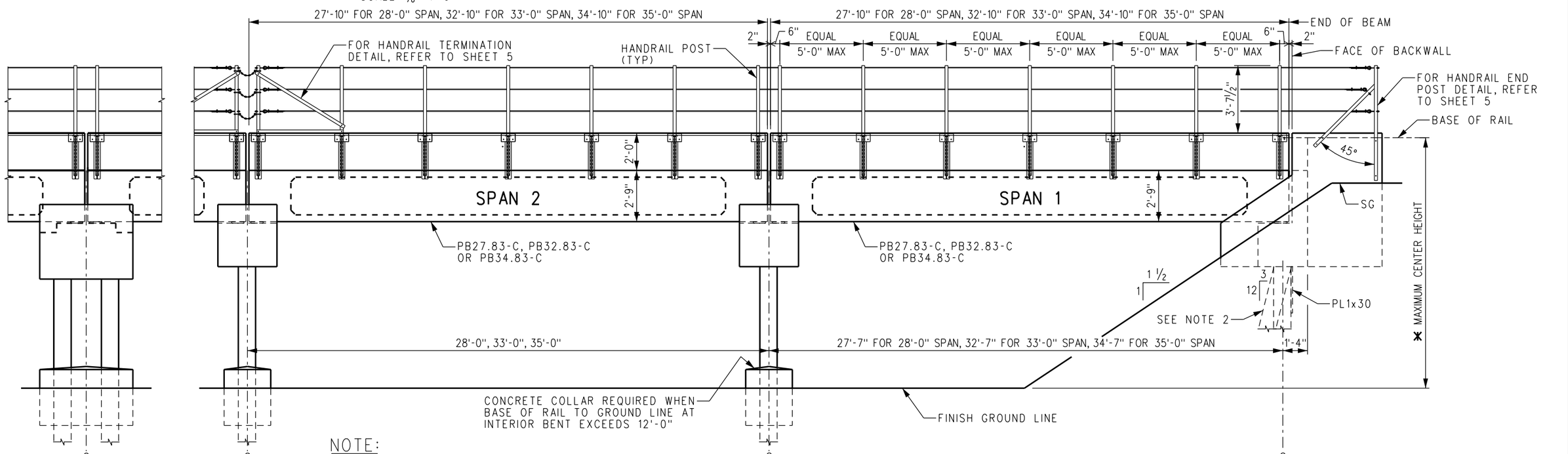

NOTE:
HANDRAIL TERMINATION REQUIRED EVERY 2 SPANS.

ELEVATION

SCALE: 3/8"=1'-0"

* 17'-0" FOR TWO SPANS
21'-0" FOR THREE SPANS
30'-0" FOR FOUR SPANS
35'-0" FOR FIVE OR MORE SPANS

REV.	DATE	DESCRIPTION	DES.	ENG.
X	XX-XX-XX	REVISION	XX	XX

DRAWN BY: A. CARLOS DATE: 03/31/2011

ASSISTANT DIRECTOR: STANDARDS & DESIGN

DIRECTOR OF ENGINEERING AND CONSTRUCTION

METROLINK®
SOUTHERN CALIFORNIA REGIONAL RAIL AUTHORITY
ONE GATEWAY PLAZA, 12TH FLOOR, L. A., CA. 90012

ENGINEERING STANDARDS

GENERAL ARRANGEMENT
PRECAST/PRESTRESSED CONCRETE
DOUBLE BOX BEAM BRIDGES

STANDARD 6001
SCALE: AS NOTED
REVISION –
SHEET 4 OF 26
CADD FILE: ES6001-04

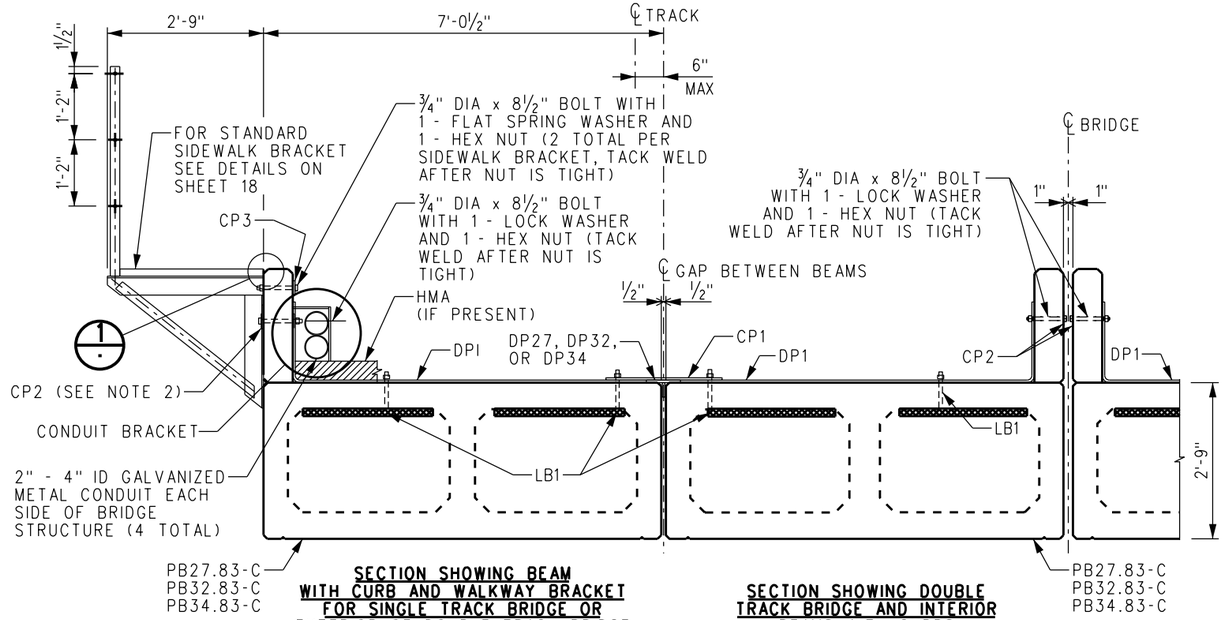

SECTION SHOWING BEAM WITH CURB AND WALKWAY BRACKET FOR SINGLE TRACK BRIDGE OR EXTERIOR OF DOUBLE TRACK BRIDGE

SECTION SHOWING DOUBLE TRACK BRIDGE AND INTERIOR BEAMS WITH CURBS

NOTES:

1. FOR LIFTING WEIGHTS, BENT REQUIREMENTS AND OTHER RELATED NOTES SEE SHEET 4.
2. AT END BENTS, SUBSTITUTE CURB ANGLE CA2 FOR CURB PLATE CP2.

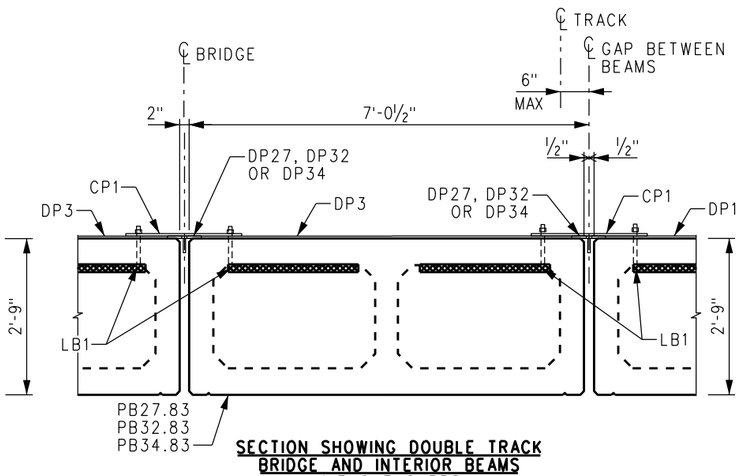

SECTION SHOWING DOUBLE TRACK BRIDGE AND INTERIOR BEAMS WITHOUT CURBS

TYPICAL PARTIAL SECTIONS

SCALE: ¾" = 1'-0"

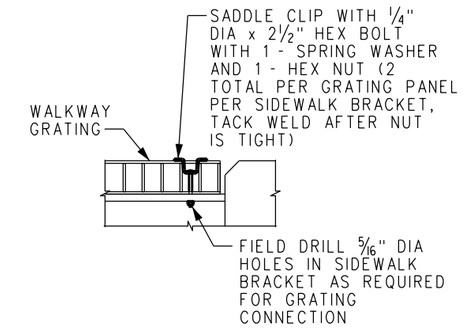

DETAIL 1

SCALE: NONE

CABLE INSTALLATION INSTRUCTIONS:

1. THREAD CABLE THROUGH ALL HANDRAIL POSTS AND EYEBOLTS ON ONE END HANDRAIL POST.
2. STRETCH CABLE, HANG A MINIMUM OF 10 LBS ON CABLE BETWEEN TWO POSTS, AND REMOVE SAG TO A MAXIMUM OF 2 INCHES.
3. TIGHTEN CLIPS AND EYEBOLTS AT REMAINING END HANDRAIL POST.
4. REMOVE WEIGHTS.

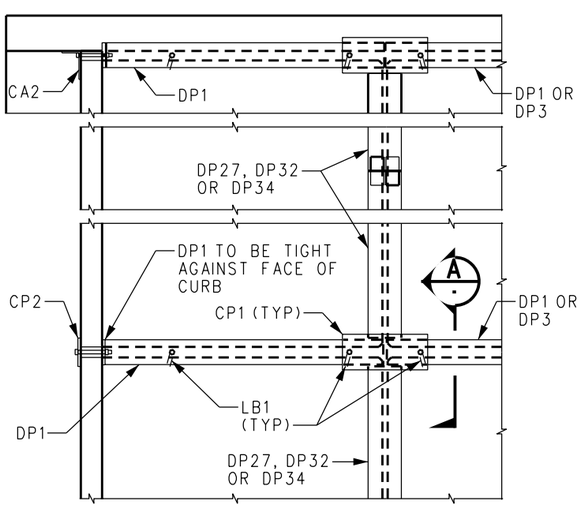

TYPICAL PLACEMENT OF DECK PLATES

SCALE: NONE

ASSEMBLE COMPLETE TRANSVERSE LINE OF DECK PLATES BY PLACING CP1'S AND LB1'S. TURN LEG OF LB1'S TO PERMIT PLACEMENT BETWEEN BEAMS OR BETWEEN BEAM AND PARAPET WALL AND THEN TURN LB1'S AS SHOWN AND TIGHTEN NUT. BURN OFF PROJECTING PORTION OF BOLT AFTER NUT IS TIGHT. TACK WELD NUTS.

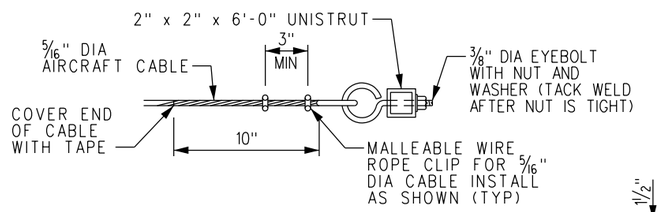

VIEW 2

SCALE: NONE

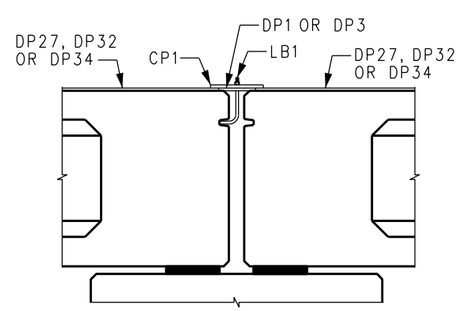

SECTION A

SCALE: NONE

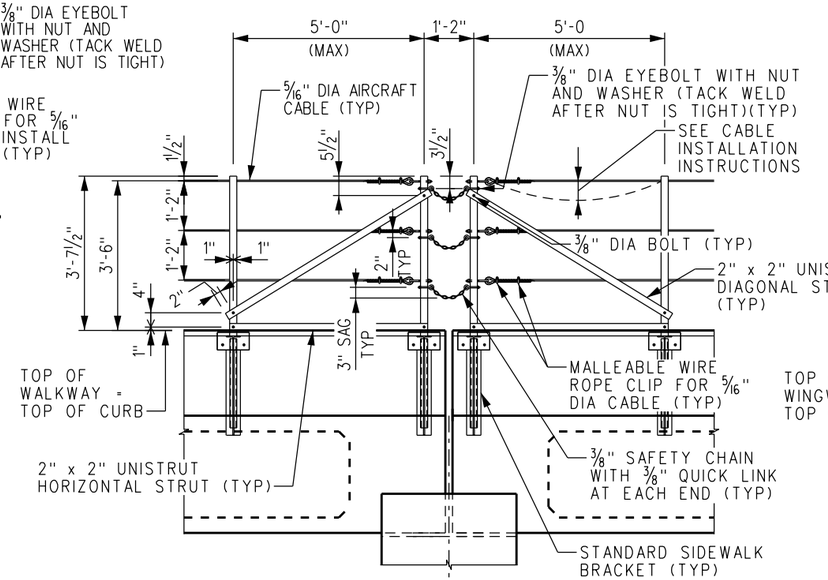

HANDRAIL TERMINATION DETAIL

SCALE: NONE

NOTE:

INSTALL SAFETY CHAIN WITH A 3" SAG.

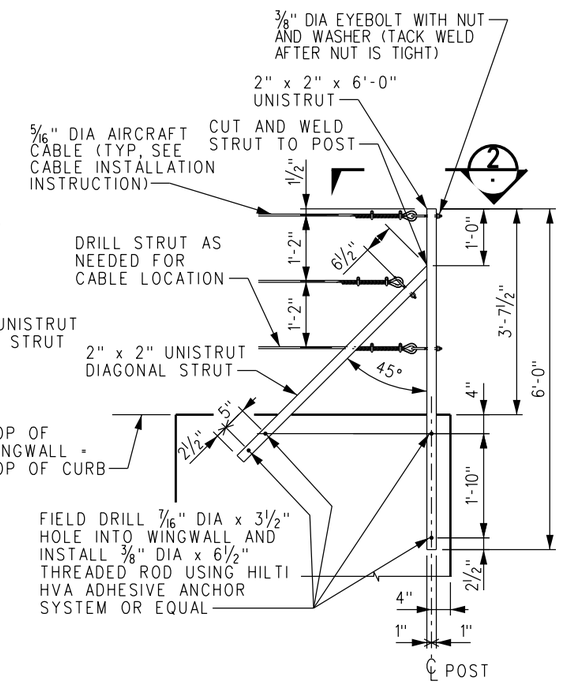

HANDRAIL END POST DETAIL

SCALE: ¾" = 1'-0"

REV.	DATE	DESCRIPTION	DES.	ENG.
X	XX-XX-XX	REVISION	XX	XX

DRAWN BY: A. CARLOS DATE: 03/31/2011

ASSISTANT DIRECTOR: STANDARDS & DESIGN

DIRECTOR OF ENGINEERING AND CONSTRUCTION

METROLINK

SOUTHERN CALIFORNIA REGIONAL RAIL AUTHORITY
ONE GATEWAY PLAZA, 12TH FLOOR, L. A., CA. 90012

ENGINEERING STANDARDS

SECTIONS AND DETAILS
PRECAST/PRESTRESSED CONCRETE
DOUBLE BOX BEAM BRIDGES

STANDARD 6001
SCALE: AS NOTED
REVISION –
SHEET 5 OF 26
CADD FILE: ES6001-05

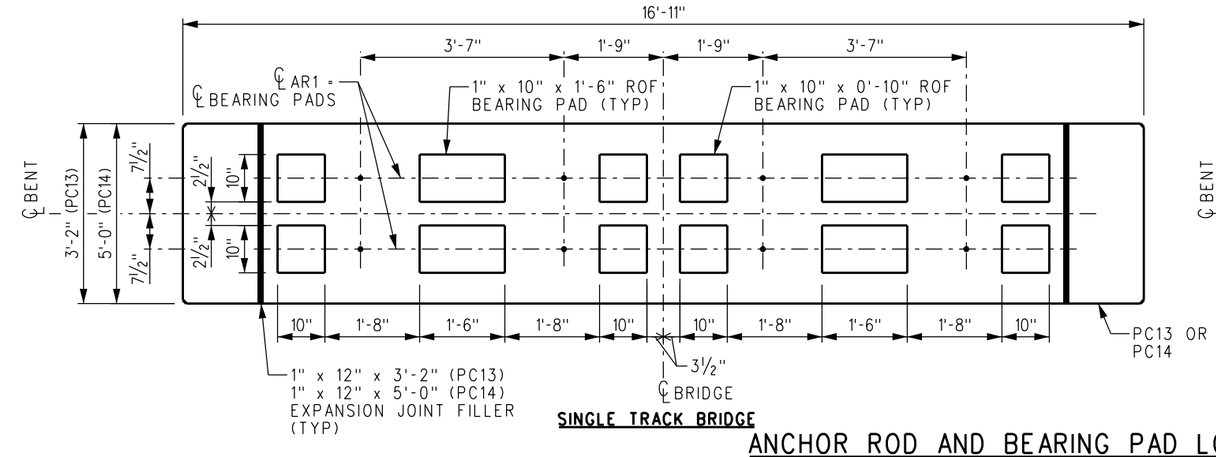

SINGLE TRACK BRIDGE

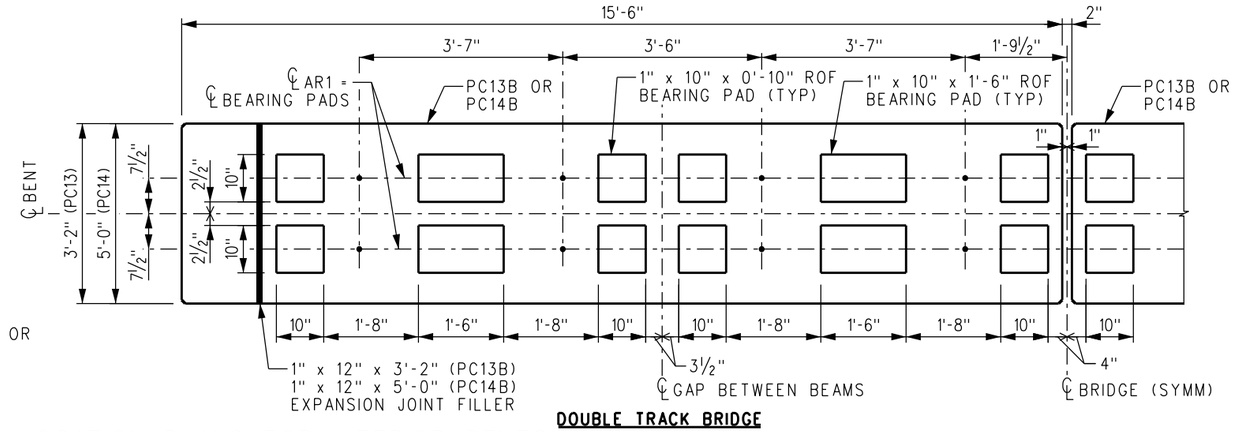

DOUBLE TRACK BRIDGE

ANCHOR ROD AND BEARING PAD LOCATION PLANS FOR INTERIOR BENTS

ANCHOR ROD AR1 MUST BE PLACED WITHIN ¼" OF PLAN LOCATION OR BEAMS WILL NOT FIT

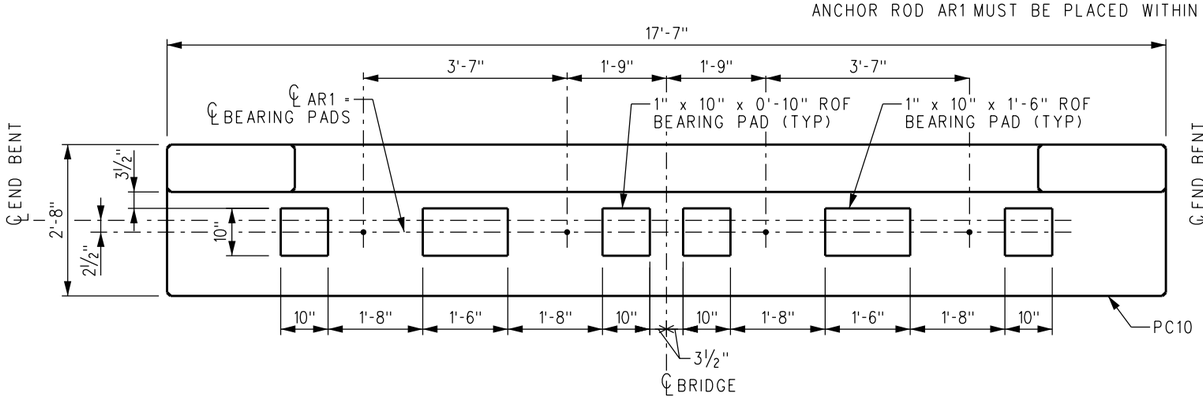

SINGLE TRACK BRIDGE

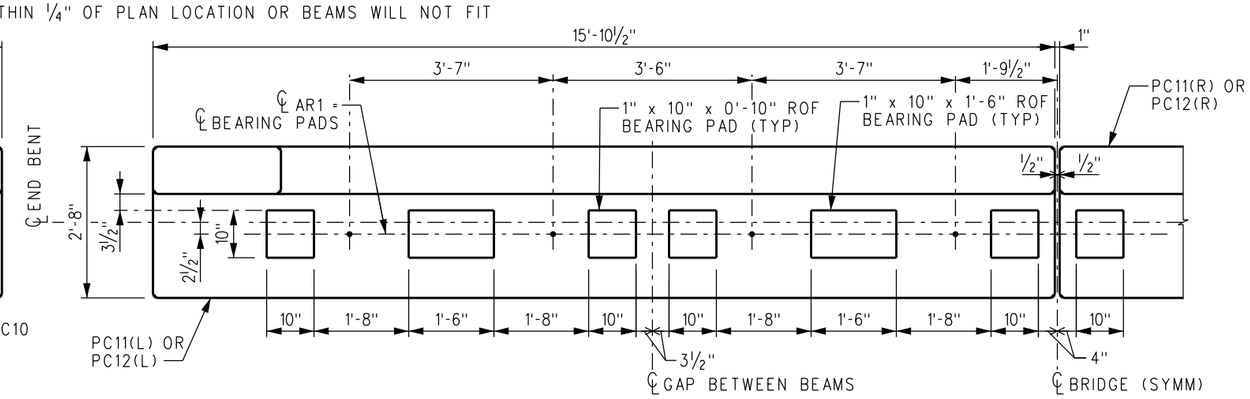

DOUBLE TRACK BRIDGE

ANCHOR ROD AND BEARING PAD LOCATION PLANS FOR END BENTS

ANCHOR ROD AR1 MUST BE PLACED WITHIN ¼" OF PLAN LOCATION OR BEAMS WILL NOT FIT

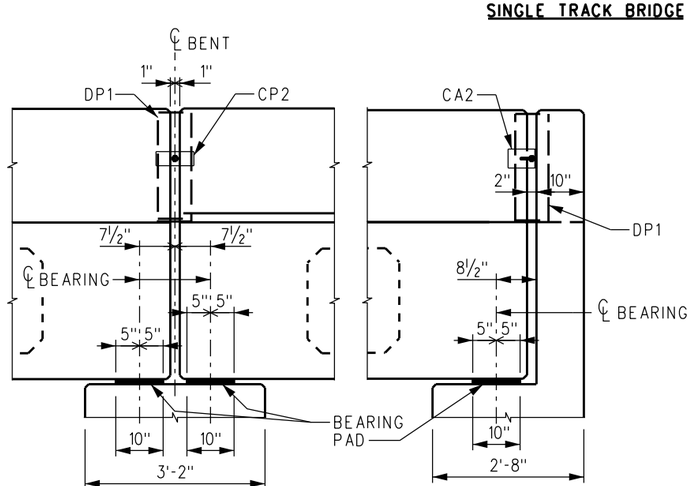

INTERIOR BENT

END BENT

BEARING DETAILS

SCALE: ¾" = 1'-0"

NOTE:

HANDRAILS NOT SHOWN FOR CLARITY.

NOTES:

1. ROF = RANDOM ORIENTED FIBER
2. BEARING PADS AND EXPANSION JOINT FILLER ARE FIELD ATTACHED TO CAPS.

REV.	DATE	DESCRIPTION	DES.	ENG.
X	XX-XX-XX	REVISION	XX	XX

DRAWN BY: A. CARLOS DATE: 03/31/2011

ASSISTANT DIRECTOR: STANDARDS & DESIGN

DIRECTOR OF ENGINEERING AND CONSTRUCTION

METROLINK®

SOUTHERN CALIFORNIA REGIONAL RAIL AUTHORITY
ONE GATEWAY PLAZA, 12TH FLOOR, L. A., CA. 90012

ENGINEERING STANDARDS

ANCHOR ROD AND BEARING PAD LAYOUT
PRECAST/PRESTRESSED CONCRETE
DOUBLE BOX BEAM BRIDGES

STANDARD 6001

SCALE: ¾" = 1'-0"

REVISION –

SHEET 6 OF 26

CADD FILE: ES6001-26

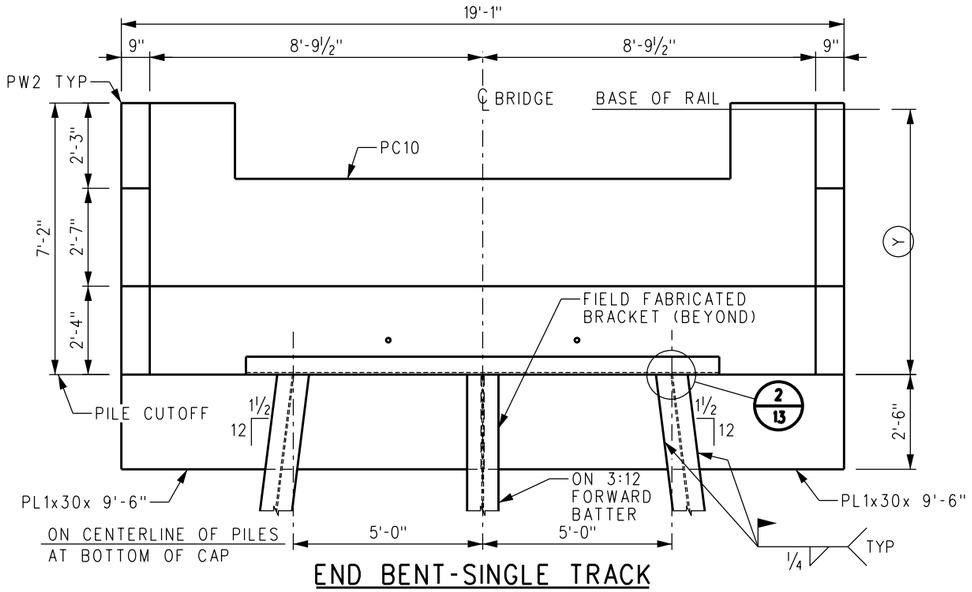

END BENT-SINGLE TRACK

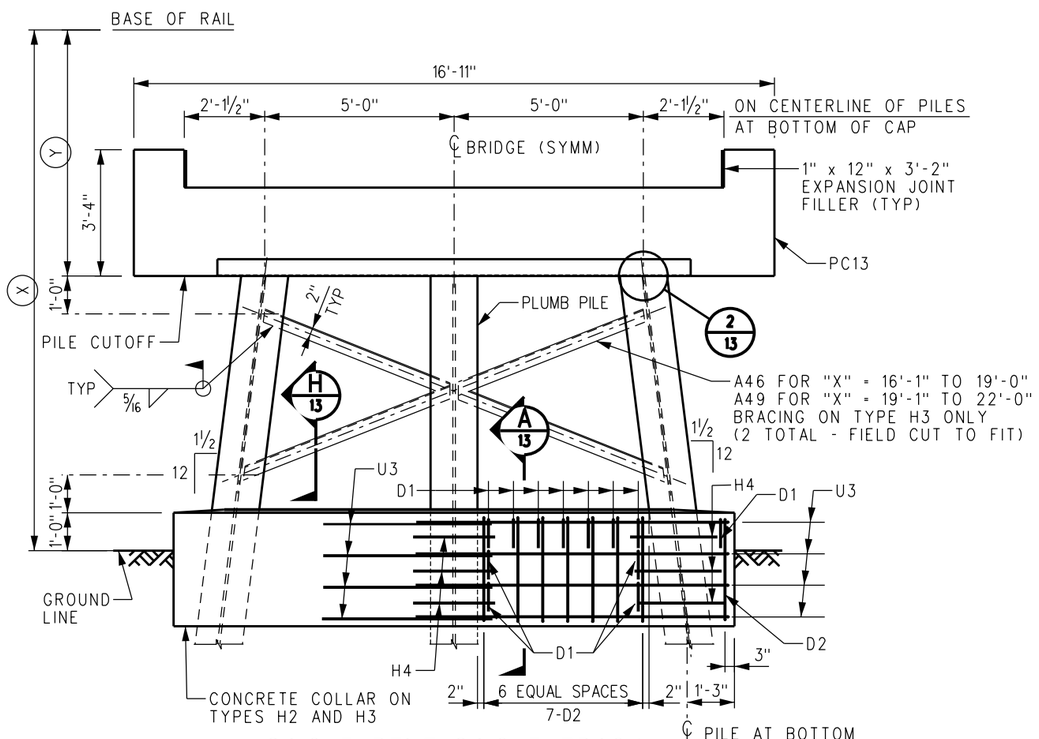

SINGLE BENT-SINGLE TRACK

TYPE H1 - "X" = UP TO 12'-0" (NO COLLAR OR BRACING)
TYPE H2 - "X" = 12'-1" TO 16'-0" (COLLAR, NO BRACING)
TYPE H3 - "X" = 16'-1" TO 22'-0" (COLLAR AND BRACING)

NOTES:

1. ALL PILES ARE HP14x117, ASTM A572 GRADE 50 STEEL BEARING PILES UNLESS OTHERWISE SPECIFIED BY THE ENGINEER.
2. ALL BRACING ANGLES TO BE CUT TO LENGTH AS REQUIRED.
3. AFTER PRECAST CONCRETE MEMBERS ARE SET, FILL RECESSES AT LIFT ANCHORS WITH EPOXY GROUT TO TOP OF SURROUNDING CONCRETE.
4. FOR "TYPICAL PILE SPLICE DETAIL", "WING WALL TO END CAP DETAILS" AND "HEAD OF BANK DETAILS" SEE SHEET 13.
5. THE FOLLOWING FORMULA WILL GIVE ESTIMATED QUANTITIES OF CONCRETE IN THE CONCRETE COLLARS IN CUBIC YARDS:
   BENTS H2, H3 AND H4 - 0.07 x "X" + 3.1
   WHERE "X" IS THE DISTANCE FROM BASE OF RAIL TO GROUND LINE IN FEET.
6. "Y" IS THE DISTANCE FROM BASE OF RAIL TO PILE CUTOFF. FOR DESIGN ELEVATIONS, "Y" SHALL BE ESTABLISHED IN COORDINATION WITH SCRRA DIRECTOR OF ENGINEERING AND CONSTRUCTION. FOR A TOTAL OF 12" DEPTH (BALLAST PLUS HMA) BELOW STANDARD CONCRETE TIES, "Y" = 6'-11" FOR SINGLE ROW PILE BENTS.

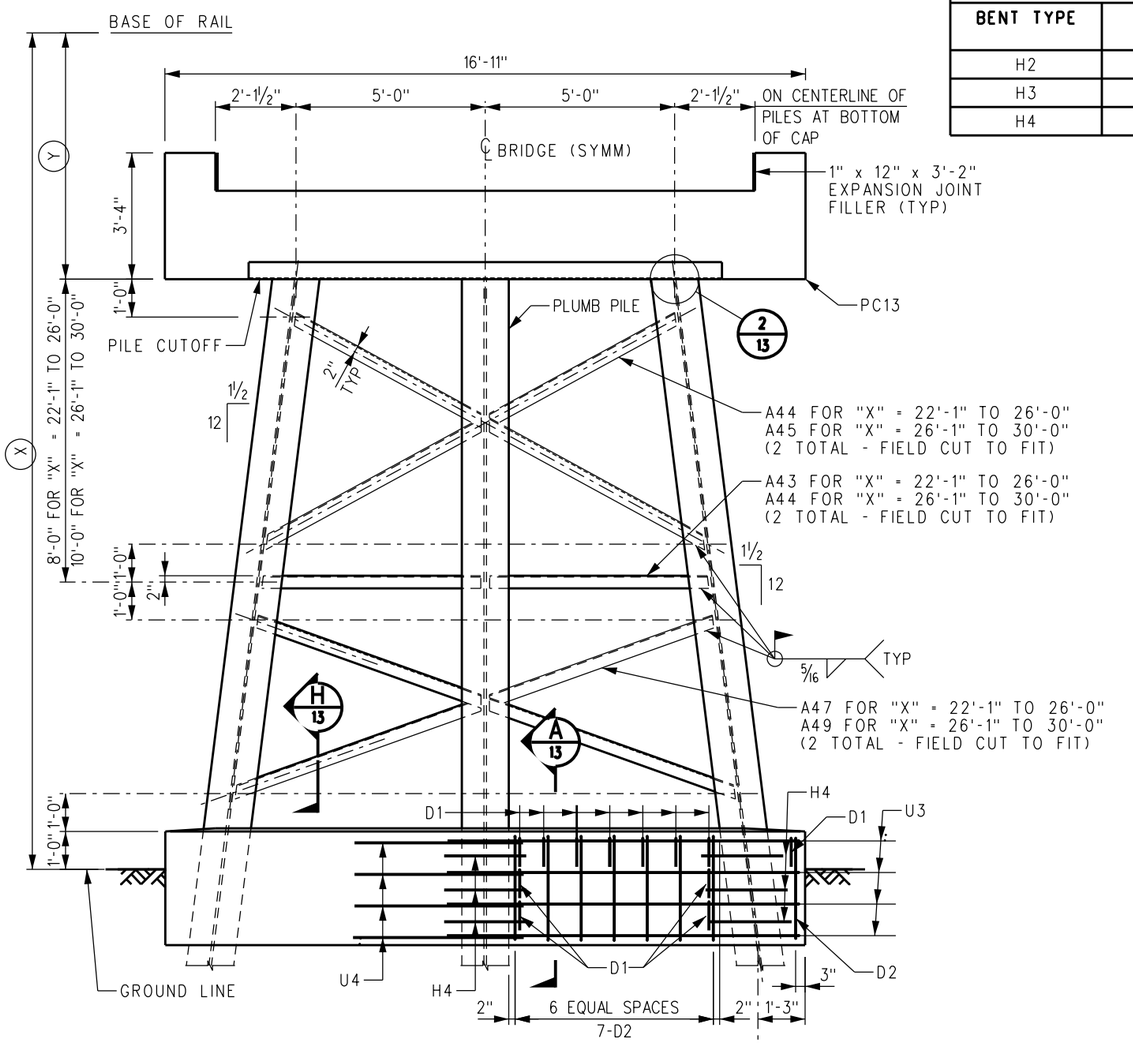

SINGLE BENT-SINGLE TRACK

TYPE H4 - "X" = 22'-1" TO 30'-0"

REINFORCING STEEL REQUIRED PER CONCRETE COLLAR

BENT TYPE			REINFORCING STEEL MARK
H2	H3	H4	
24	24	24	D1
16	16	16	D2
8	8	4	U3
-	-	4	U4
9	9	9	H4, #4 x 3'-0" (STRAIGHT)

ESTIMATED QUANTITIES PER COLLAR

BENT TYPE	REINFORCING STEEL (LBS)
H2	264
H3	264
H4	272

REV.	DATE	DESCRIPTION	DES.	ENG.
X	XX-XX-XX	REVISION	XX	XX

DRAWN BY: A. CARLOS DATE: 03/31/2011

ASSISTANT DIRECTOR: STANDARDS & DESIGN

DIRECTOR OF ENGINEERING AND CONSTRUCTION

METROLINK

SOUTHERN CALIFORNIA REGIONAL RAIL AUTHORITY
ONE GATEWAY PLAZA, 12TH FLOOR, L. A., CA. 90012

ENGINEERING STANDARDS

SINGLE ROW PILE BENTS (1 OF 4)
PRECAST/PRESTRESSED CONCRETE
DOUBLE BOX BEAM BRIDGES

STANDARD 6001
SCALE: ½" = 1'-0"
REVISION –
SHEET 7 OF 26
CADD FILE: ES6001-07

NOTES:

1. ALL PILES ARE HP14x117, ASTM A572 GRADE 50 STEEL BEARING PILES UNLESS OTHERWISE SPECIFIED BY THE ENGINEER.
2. ALL BRACING ANGLES TO BE CUT TO LENGTH AS REQUIRED.
3. AFTER PRECAST CONCRETE MEMBERS ARE SET, FILL RECESSES AT LIFT ANCHORS WITH EPOXY GROUT TO TOP OF SURROUNDING CONCRETE.
4. FOR "TYPICAL PILE SPLICE DETAIL", "WING WALL TO END CAP DETAILS" AND "HEAD OF BANK DETAILS" SEE SHEET 13.
5. THE FOLLOWING FORMULA WILL GIVE ESTIMATED QUANTITIES OF CONCRETE IN THE CONCRETE COLLARS IN CUBIC YARDS;
   BENTS H6, H7 AND H8 - 0.07 x "X" + 3.1
   WHERE "X" IS THE DISTANCE FROM BASE OF RAIL TO GROUND LINE IN FEET.
6. "Y" IS THE DISTANCE FROM BASE OF RAIL TO PILE CUTOFF. FOR DESIGN ELEVATIONS, "Y" SHALL BE ESTABLISHED IN COORDINATION WITH SCRRA DIRECTOR OF ENGINEERING AND CONSTRUCTION. FOR A TOTAL OF 12" DEPTH (BALLAST PLUS HMA) BELOW STANDARD CONCRETE TIES, "Y" = 6'-11" FOR SINGLE ROW PILE BENTS.

ESTIMATED QUANTITIES PER COLLAR

BENT TYPE	REINFORCING STEEL (LBS)
H6	280
H7	280
H8	296

REINFORCING STEEL REQUIRED PER CONCRETE COLLAR

BENT TYPE			REINFORCING STEEL MARK
H6	H7	H8	
28	28	28	D1
16	16	16	D2
8	8	-	U3
-	-	8	U4
12	12	12	H4, #4 x 3'-0" (STRAIGHT)

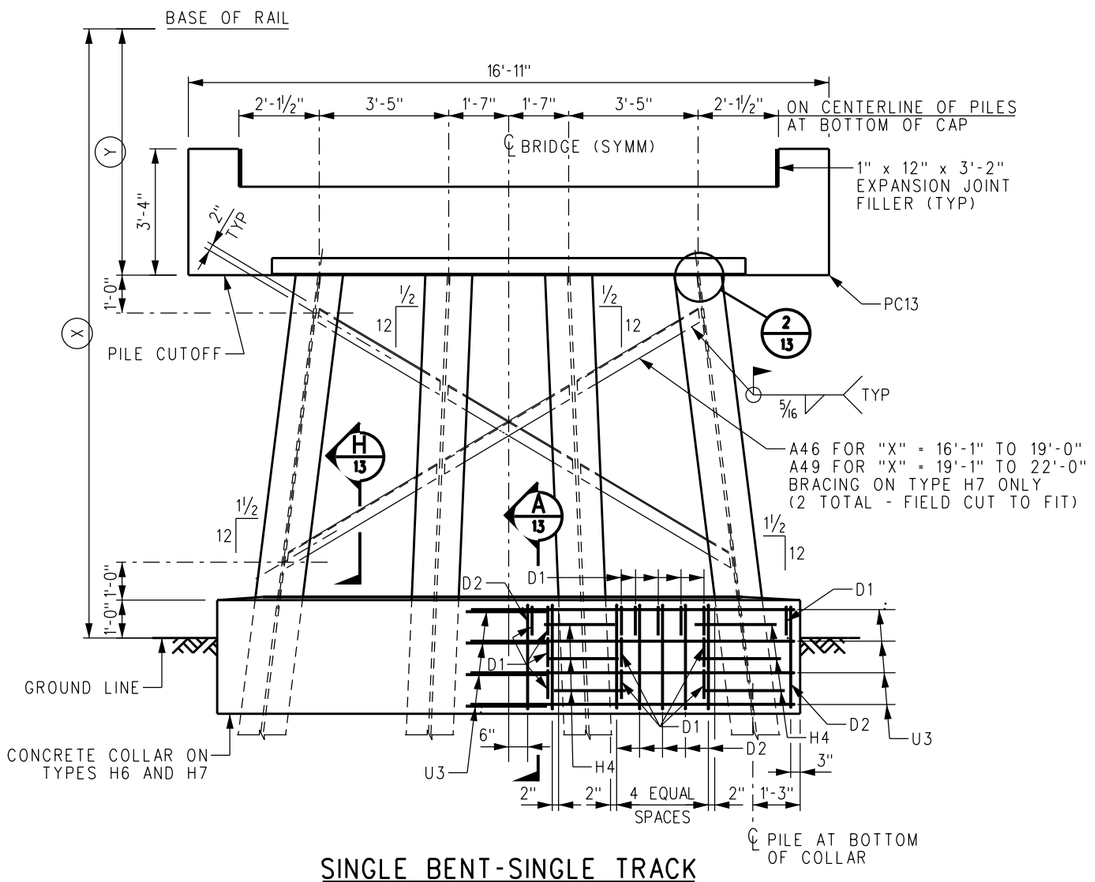

SINGLE BENT-SINGLE TRACK

TYPE H5 - "X" = UP TO 12'-0" (NO COLLAR OR BRACING)
TYPE H6 - "X" = 12'-1" TO 16'-0" (COLLAR, NO BRACING)
TYPE H7 - "X" = 16'-1" TO 22'-0" (COLLAR AND BRACING)

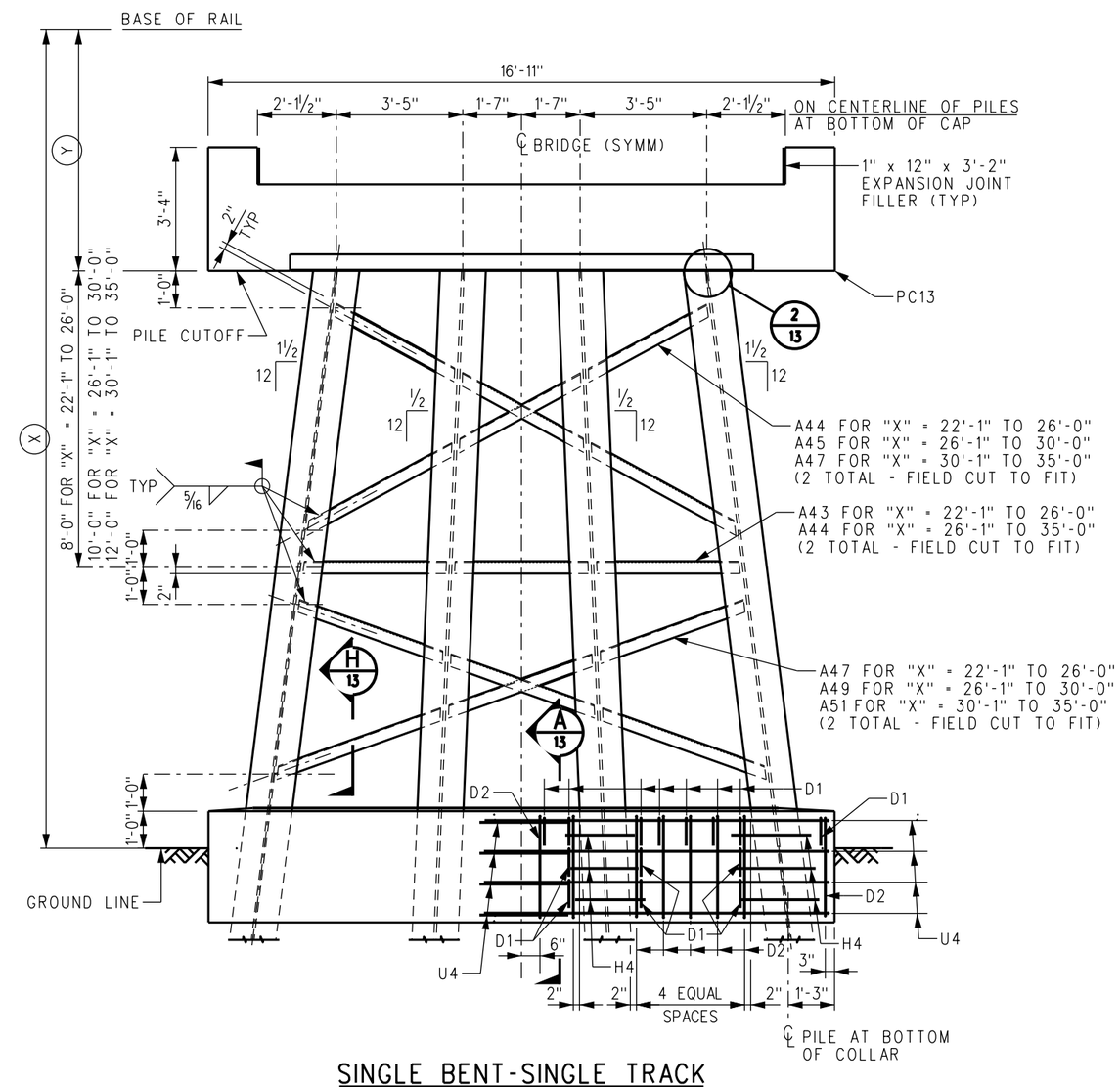

SINGLE BENT-SINGLE TRACK

TYPE H8 - "X" = 22'-1" TO 35'-0"

X	XX-XX-XX	REVISION	XX	XX
REV.	DATE	DESCRIPTION	DES.	ENG.

DRAWN BY: A. CARLOS DATE: 03/31/2011

ASSISTANT DIRECTOR: STANDARDS & DESIGN

DIRECTOR OF ENGINEERING AND CONSTRUCTION

METROLINK®
SOUTHERN CALIFORNIA REGIONAL RAIL AUTHORITY
ONE GATEWAY PLAZA, 12TH FLOOR, L. A., CA. 90012

ENGINEERING STANDARDS

SINGLE ROW PILE BENTS (2 OF 4)
PRECAST/PRESTRESSED CONCRETE
DOUBLE BOX BEAM BRIDGES

STANDARD 6001
SCALE: ½" = 1'-0"
REVISION –
SHEET 8 OF 26
CADD FILE: ES6001-08

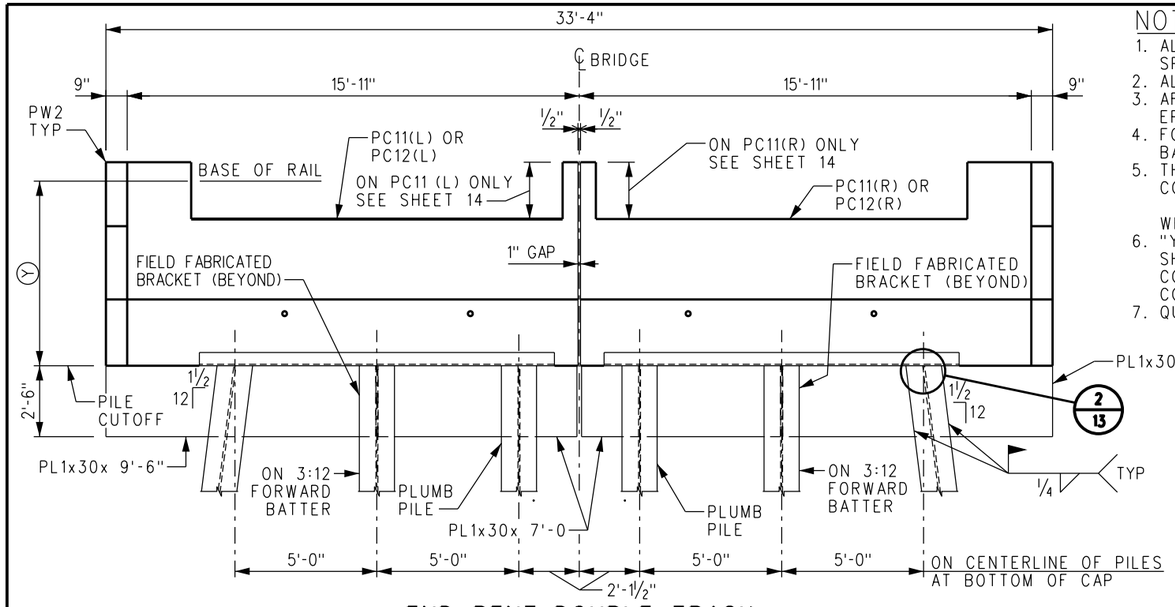

END BENT-DOUBLE TRACK

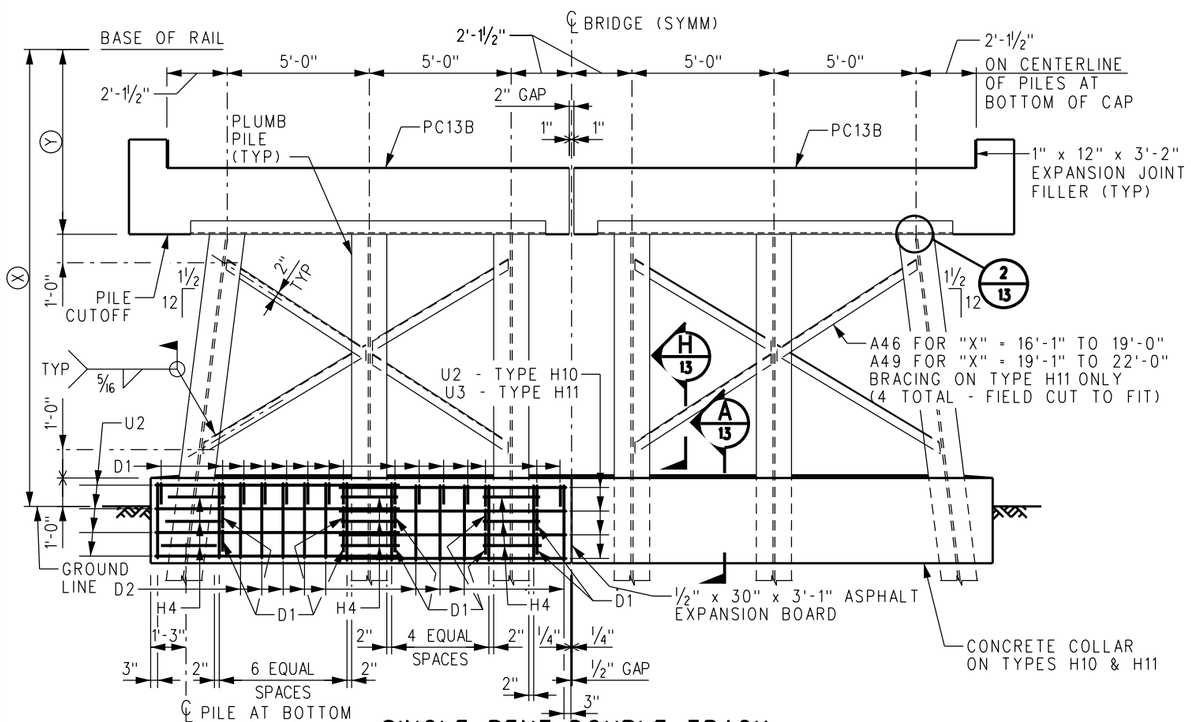

SINGLE BENT-DOUBLE TRACK

TYPE H9 - "X" = UP TO 12'-0" (NO COLLAR OR BRACING)
TYPE H10 - "X" = 12'-1" TO 16'-0" (COLLAR, NO BRACING)
TYPE H11 - "X" = 16'-1" TO 22'-0" (COLLAR AND BRACING)

NOTES:

1. ALL PILES ARE HP14x117, ASTM A572 GRADE 50 STEEL BEARING PILES UNLESS OTHERWISE SPECIFIED BY THE ENGINEER.
2. ALL BRACING ANGLES TO BE CUT TO LENGTH AS REQUIRED.
3. AFTER PRECAST CONCRETE MEMBERS ARE SET, FILL RECESSES AT LIFT ANCHORS WITH EPOXY GROUT TO TOP OF SURROUNDING CONCRETE.
4. FOR "TYPICAL PILE SPLICE DETAIL", "WING WALL TO END CAP DETAILS" AND "HEAD OF BANK DETAILS" SEE SHEET 13.
5. THE FOLLOWING FORMULA WILL GIVE ESTIMATED QUANTITIES OF CONCRETE IN THE CONCRETE COLLARS IN CUBIC YARDS;
   BENTS H10, H11 AND H12 - 0.07 x "X" + 7.1
   WHERE "X" IS THE DISTANCE FROM BASE OF RAIL TO GROUND LINE IN FEET.
6. "Y" IS THE DISTANCE FROM BASE OF RAIL TO PILE CUTOFF. FOR DESIGN ELEVATIONS, "Y" SHALL BE ESTABLISHED IN COORDINATION WITH SCRRA DIRECTOR OF ENGINEERING AND CONSTRUCTION. FOR A TOTAL OF 12" DEPTH (BALLAST PLUS HMA) BELOW STANDARD CONCRETE TIES, "Y" = 6'-11" FOR SINGLE ROW PILE BENTS.
7. QUANTITIES PROVIDED FOR CONCRETE COLLARS INCLUDE BOTH SIDES.

REINFORCING STEEL REQUIRED PER CONCRETE COLLAR

BENT TYPE			REINFORCING STEEL MARK
H10	H11	H12	
50	50	50	D1
30	30	30	D2
16	8	-	U2
-	8	16	U3
18	18	18	H4, #4 x 3'-0" (STRAIGHT)

ESTIMATED QUANTITIES PER COLLAR

BENT TYPE	REINFORCING STEEL (LBS)
H10	502
H11	513
H12	524

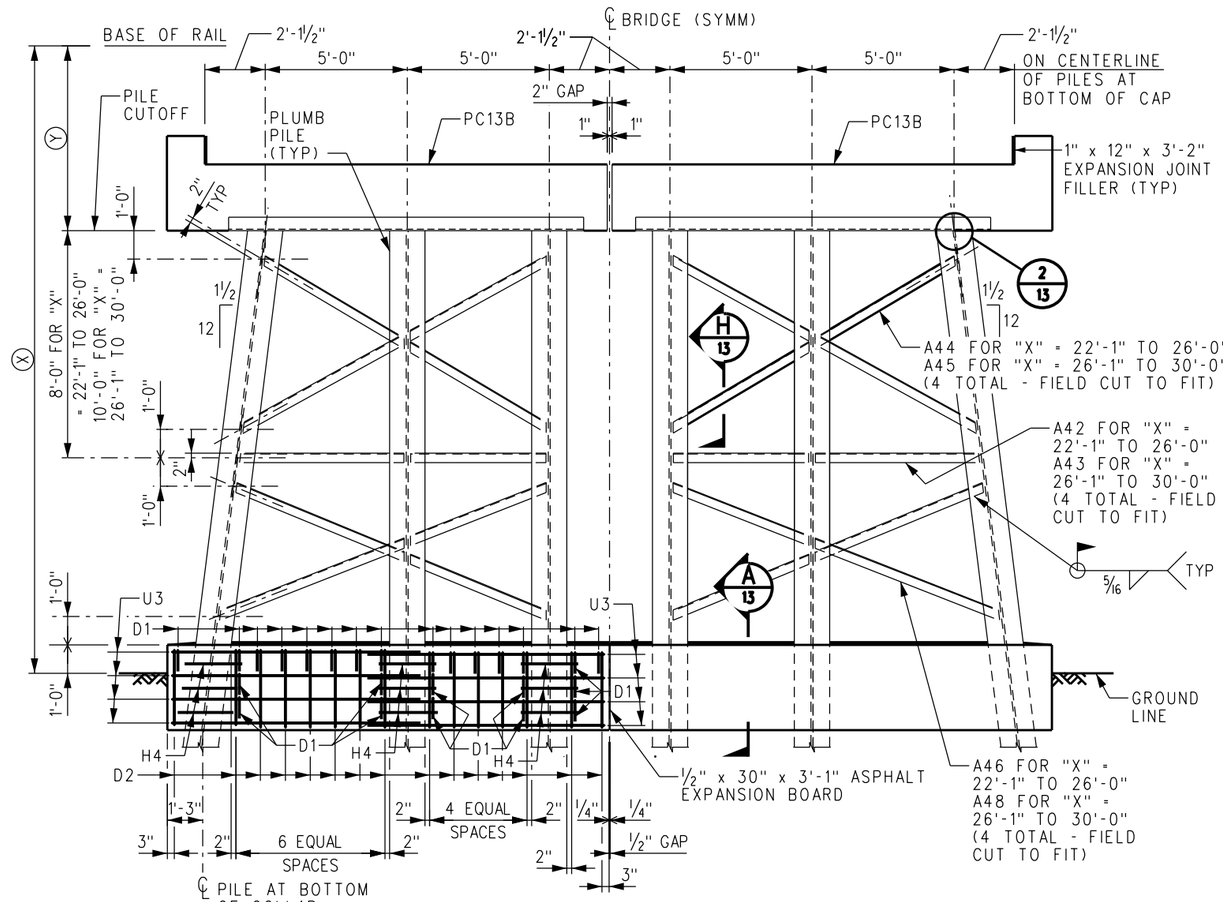

SINGLE BENT-DOUBLE TRACK

TYPE H12 - "X" 22'-1" TO 30'-0"

REV.	DATE	DESCRIPTION	DES.	ENG.
X	XX-XX-XX	REVISION	XX	XX

DRAWN BY: A. CARLOS DATE: 03/31/2011

ASSISTANT DIRECTOR: STANDARDS & DESIGN

DIRECTOR OF ENGINEERING AND CONSTRUCTION

METROLINK®
SOUTHERN CALIFORNIA REGIONAL RAIL AUTHORITY
ONE GATEWAY PLAZA, 12TH FLOOR, L. A., CA. 90012

ENGINEERING STANDARDS

SINGLE ROW PILE BENTS (3 OF 4)
PRECAST/PRESTRESSED CONCRETE
DOUBLE BOX BEAM BRIDGES

STANDARD 6001
SCALE: ⅜" = 1'-0"
REVISION –
SHEET 9 OF 26
CADD FILE: ES6001-09

NOTES:

1. ALL PILES ARE HP14x117, ASTM A572 GRADE 50 STEEL BEARING PILES UNLESS OTHERWISE SPECIFIED BY THE ENGINEER.
2. ALL BRACING ANGLES TO BE CUT TO LENGTH AS REQUIRED.
3. AFTER PRECAST CONCRETE MEMBERS ARE SET, FILL RECESSES AT LIFT ANCHORS WITH EPOXY GROUT TO TOP OF SURROUNDING CONCRETE.
4. FOR "TYPICAL PILE SPLICE DETAIL", "WING WALL TO END CAP DETAILS" AND "HEAD OF BANK DETAILS" SEE SHEET 13.
5. THE FOLLOWING FORMULA WILL GIVE ESTIMATED QUANTITIES OF CONCRETE IN THE CONCRETE COLLARS IN CUBIC YARDS:
   BENTS H14, H15 AND H16 - 0.07 x "X" + 7.1
   WHERE "X" IS THE DISTANCE FROM BASE OF RAIL TO GROUND LINE IN FEET.
6. "Y" IS THE DISTANCE FROM BASE OF RAIL TO PILE CUTOFF. FOR DESIGN ELEVATIONS, "Y" SHALL BE ESTABLISHED IN COORDINATION WITH SCRRA DIRECTOR OF ENGINEERING AND CONSTRUCTION. FOR A TOTAL OF 12" DEPTH (BALLAST PLUS HMA) BELOW STANDARD CONCRETE TIES, "Y" = 6'-11" FOR SINGLE ROW PILE BENTS.
7. QUANTITIES PROVIDED FOR CONCRETE COLLARS INCLUDE BOTH SIDES.

REINFORCING STEEL REQUIRED PER CONCRETE COLLAR

BENT TYPE			REINFORCING STEEL MARK
H14	H15	H16	
56	56	58	D1
28	28	30	D2
16	8	-	U2
-	8	16	U3
24	24	24	H4, #4 x 3'-0" (STRAIGHT)

ESTIMATED QUANTITIES PER COLLAR

BENT TYPE	REINFORCING STEEL (LBS)
H14	519
H15	530
H16	555

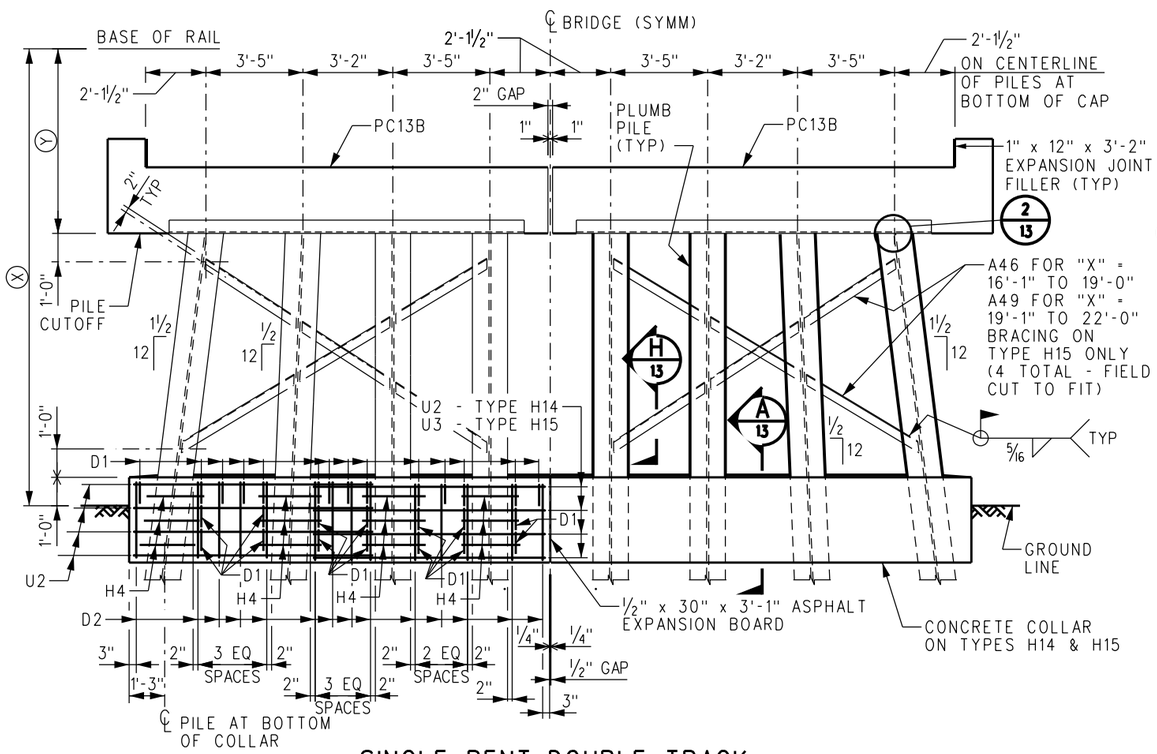

SINGLE BENT-DOUBLE TRACK

TYPE H13 - "X" = UP TO 12'-0" (NO COLLAR OR BRACING)
TYPE H14 - "X" = 12'-1" TO 16'-0" (COLLAR, NO BRACING)
TYPE H15 - "X" = 16'-1" TO 22'-0" (COLLAR AND BRACING)

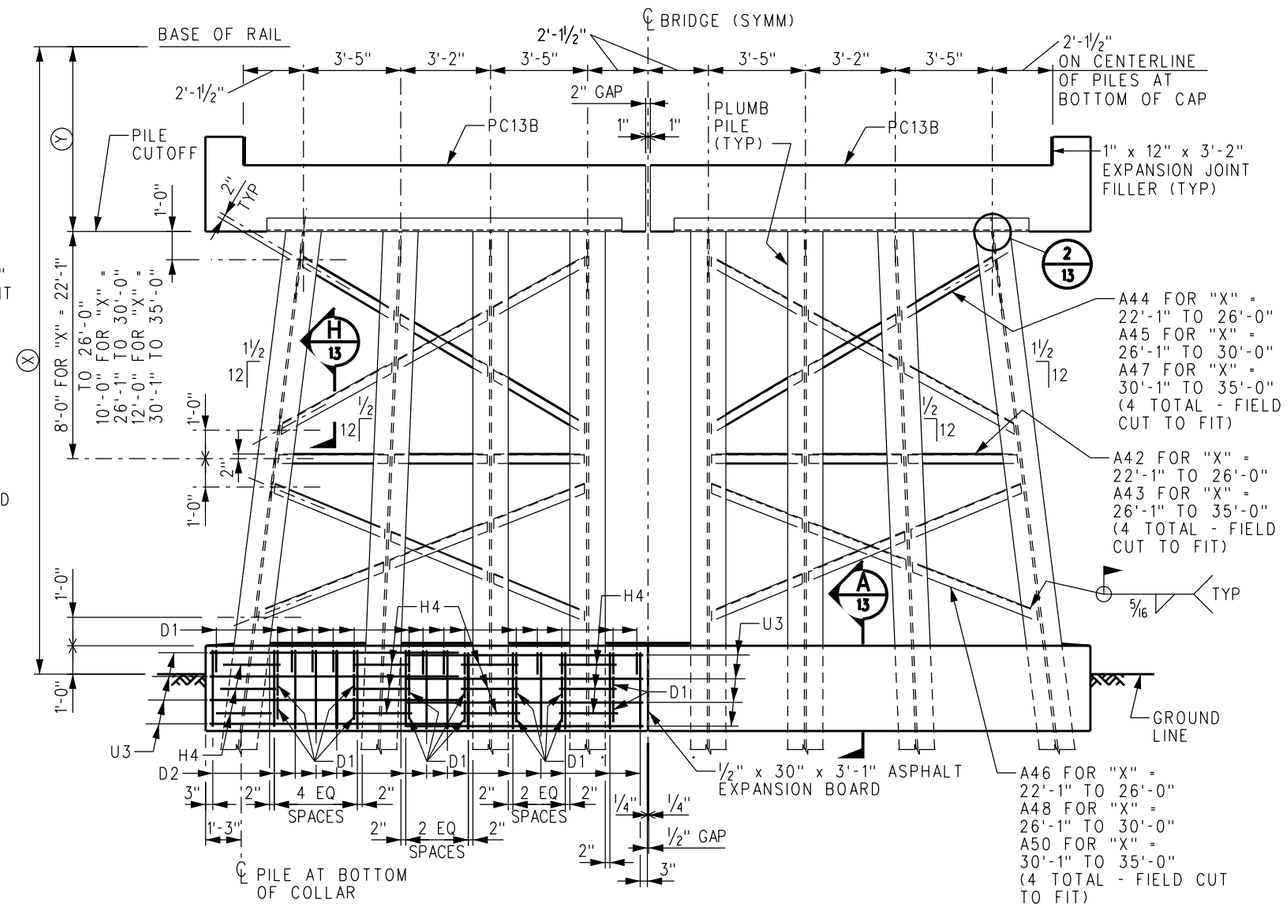

SINGLE BENT-DOUBLE TRACK

TYPE H16 - "X" = 22'-1" TO 35'-0"

REV.	DATE	DESCRIPTION	DES.	ENG.
X	XX-XX-XX	REVISION	XX	XX

DRAWN BY: A. CARLOS DATE: 03/31/2011

ASSISTANT DIRECTOR: STANDARDS & DESIGN

DIRECTOR OF ENGINEERING AND CONSTRUCTION

METROLINK®
SOUTHERN CALIFORNIA REGIONAL RAIL AUTHORITY
ONE GATEWAY PLAZA, 12TH FLOOR, L. A., CA. 90012

ENGINEERING STANDARDS

SINGLE ROW PILE BENTS (4 OF 4)
PRECAST/PRESTRESSED CONCRETE
DOUBLE BOX BEAM BRIDGES

STANDARD 6001
SCALE: ⅜" = 1'-0"
REVISION –
SHEET 10 OF 26
CADD FILE: ES6001-10

NOTES:

1. ALL PILES ARE HP14x117, ASTM GRADE 50 STEEL BEARING PILES UNLESS OTHERWISE SPECIFIED BY THE ENGINEER.
2. ALL BRACING ANGLES TO BE CUT TO LENGTH AS REQUIRED.
3. AFTER PRECAST CONCRETE MEMBERS ARE SET, FILL RECESSES AT LIFT ANCHORS WITH EPOXY GROUT TO TOP OF SURROUNDING CONCRETE.
4. FOR "TYPICAL PILE SPLICE DETAIL", "WING WALL TO END CAP DETAILS" AND "HEAD OF BANK DETAILS" SEE SHEET 13.
5. THE FOLLOWING FORMULA WILL GIVE ESTIMATED QUANTITIES OF CONCRETE IN THE CONCRETE COLLARS IN CUBIC YARDS:
   BENTS H18, H19 AND H20 - 0.143 x "X" + 6.4
   WHERE "X" IS THE DISTANCE FROM BASE OF RAIL TO GROUND LINE IN FEET.
6. "Y" IS THE DISTANCE FROM BASE OF RAIL TO PILE CUTOFF. FOR DESIGN ELEVATIONS, "Y" SHALL BE ESTABLISHED IN COORDINATION WITH SCRRA DIRECTOR OF ENGINEERING AND CONSTRUCTION. FOR A TOTAL OF 12" DEPTH (BALLAST PLUS HMA) BELOW STANDARD CONCRETE TIES, "Y" = 7'-7" FOR DOUBLE ROW PILE BENTS.

ESTIMATED QUANTITIES PER COLLAR		REINFORCING STEEL REQUIRED PER CONCRETE COLLAR			
BENT TYPE	REINFORCING STEEL (LBS)	BENT TYPE			REINFORCING STEEL MARK
		H18	H19	H20	
H18	457	24	24	24	D3
H19	457	16	16	16	D4
H20	473	16	16	8	U3
		-	-	8	U4
		18	18	18	H4, #4 x 3'-0" (STRAIGHT)

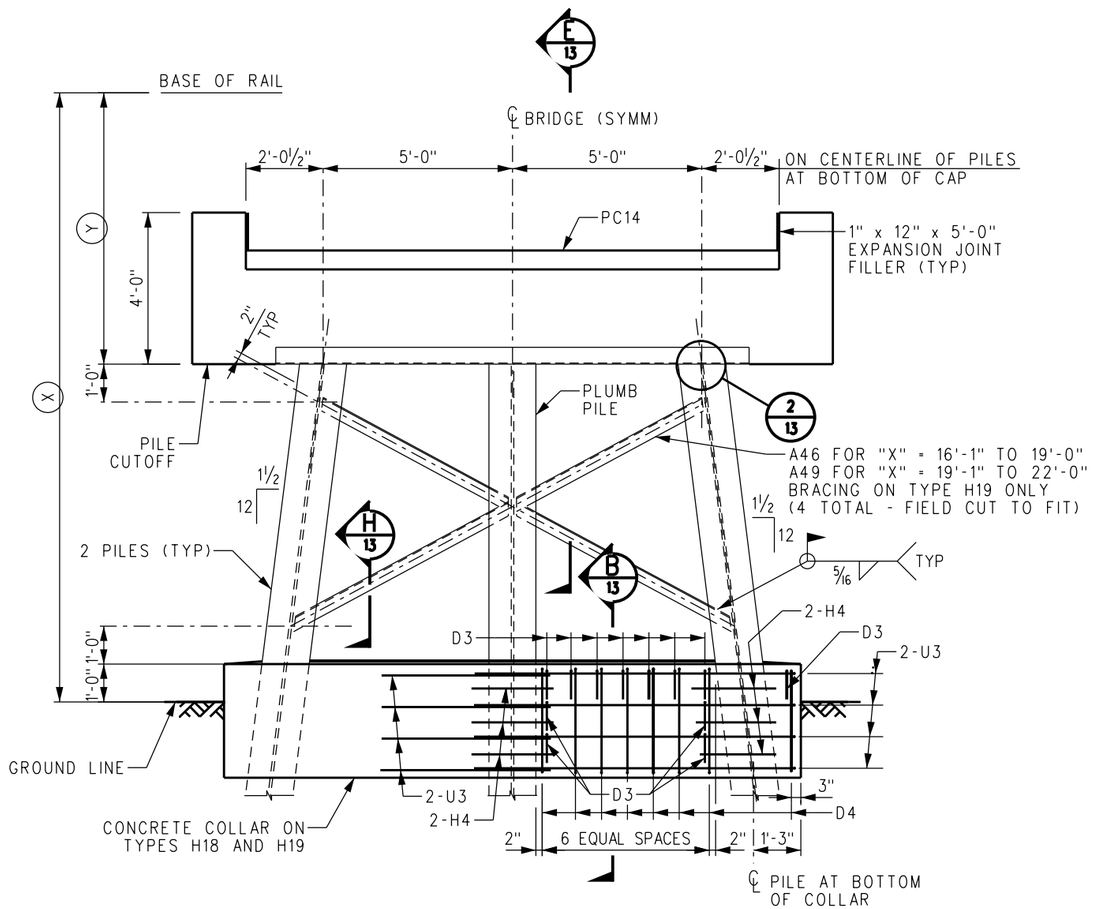

DOUBLE BENT - SINGLE TRACK

TYPE H17 - "X" = UP TO 12'-0" (NO COLLAR OR BRACING)
TYPE H18 - "X" = 12'-1" TO 16'-0" (COLLAR, NO BRACING)
TYPE H19 - "X" = 16'-1" TO 22'-0" (COLLAR AND BRACING)

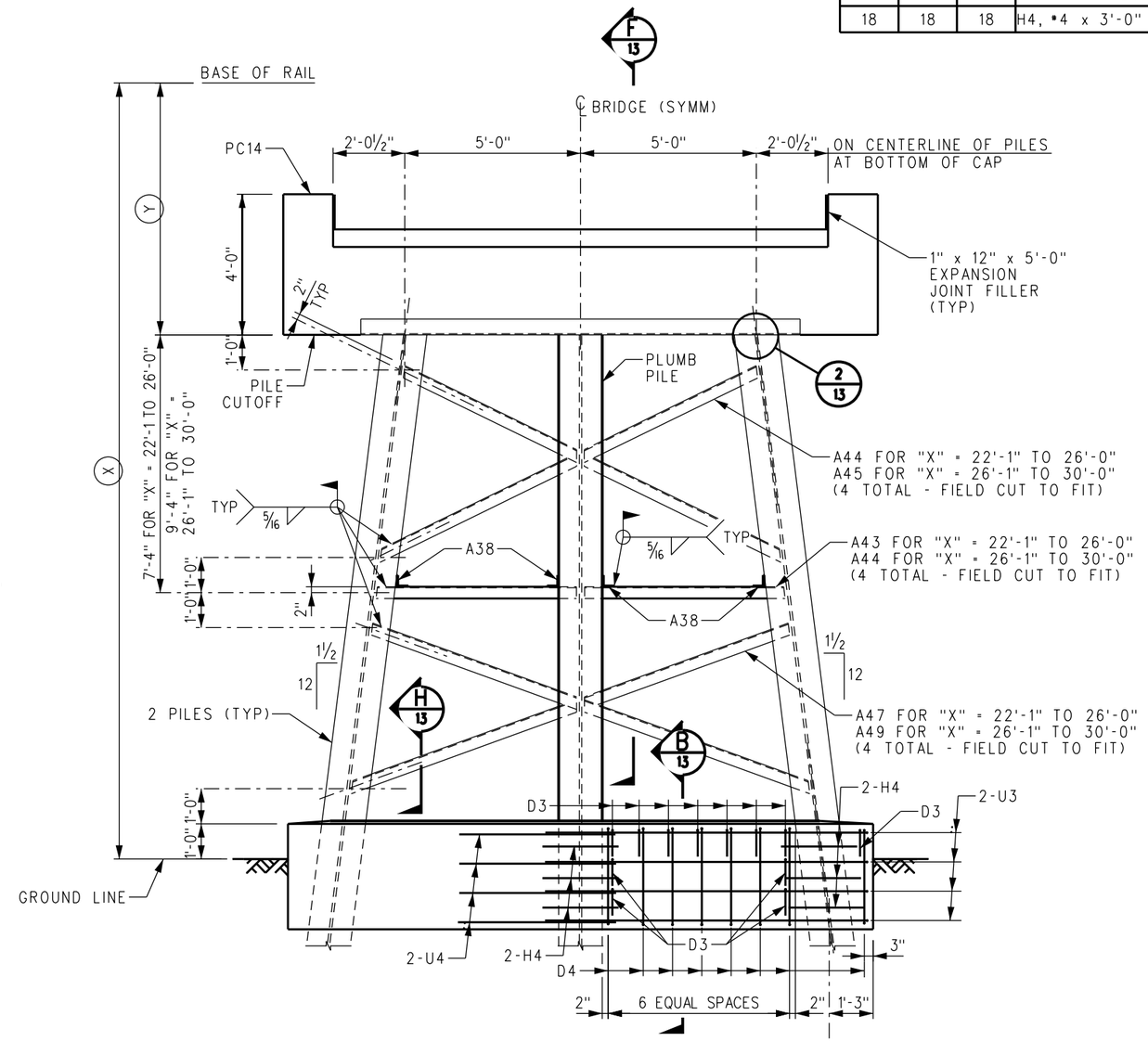

DOUBLE BENT-SINGLE TRACK

TYPE H20 - "X" = 22'-1" TO 30'-0"

REV.	DATE	DESCRIPTION	DES.	ENG.
X	XX-XX-XX	REVISION	XX	XX

DRAWN BY: A. CARLOS DATE: 03/31/2011

ASSISTANT DIRECTOR: STANDARDS & DESIGN

DIRECTOR OF ENGINEERING AND CONSTRUCTION

METROLINK®
SOUTHERN CALIFORNIA REGIONAL RAIL AUTHORITY
ONE GATEWAY PLAZA, 12TH FLOOR, L. A., CA. 90012

ENGINEERING STANDARDS

DOUBLE ROW PILE BENTS (1 OF 2)
PRECAST/PRESTRESSED CONCRETE
DOUBLE BOX BEAM BRIDGES

STANDARD 6001
SCALE: ½" = 1'-0"
REVISION –
SHEET 11 OF 26
CADD FILE: ES6001-11

NOTES:

1. ALL PILES ARE HP14x117, ASTM GRADE 50 STEEL BEARING PILES UNLESS OTHERWISE SPECIFIED BY THE ENGINEER.
2. ALL BRACING ANGLES TO BE CUT TO LENGTH AS REQUIRED.
3. AFTER PRECAST CONCRETE MEMBERS ARE SET, FILL RECESSES AT LIFT ANCHORS WITH EPOXY GROUT TO TOP OF SURROUNDING CONCRETE.
4. FOR "TYPICAL PILE SPLICE DETAIL" SEE SHEET 13.
5. THE FOLLOWING FORMULA WILL GIVE ESTIMATED QUANTITIES OF CONCRETE IN THE CONCRETE COLLARS IN CUBIC YARDS:
   BENTS H23, H24 AND H25 - 0.143 x "X" + 14.4
   WHERE "X" IS THE DISTANCE FROM BASE OF RAIL TO GROUND LINE IN FEET.
   "Y" IS THE DISTANCE FROM BASE OF RAIL TO PILE CUTOFF. FOR DESIGN ELEVATIONS, "Y"
6. SHALL BE ESTABLISHED IN COORDINATION WITH SCRRA DIRECTOR OF ENGINEERING AND CONSTRUCTION. FOR A TOTAL OF 12" DEPTH (BALLAST PLUS HMA) BELOW STANDARD CONCRETE TIES, "Y" = 7'-7" FOR DOUBLE ROW PILE BENTS.
   QUANTITIES PROVIDED FOR CONCRETE COLLARS INCLUDE BOTH SIDES.

ESTIMATED QUANTITIES PER COLLAR		REINFORCING STEEL REQUIRED PER CONCRETE COLLAR			
BENT TYPE	REINFORCING STEEL (LBS)	BENT TYPE			REINFORCING STEEL MARK
		H23	H24	H25	
H23	867	50	50	50	D3
H24	888	30	30	30	D4
H25	910	32	16	-	U2
		-	16	32	U3
		36	36	36	H4, #4 x 3'-0" (STRAIGHT)

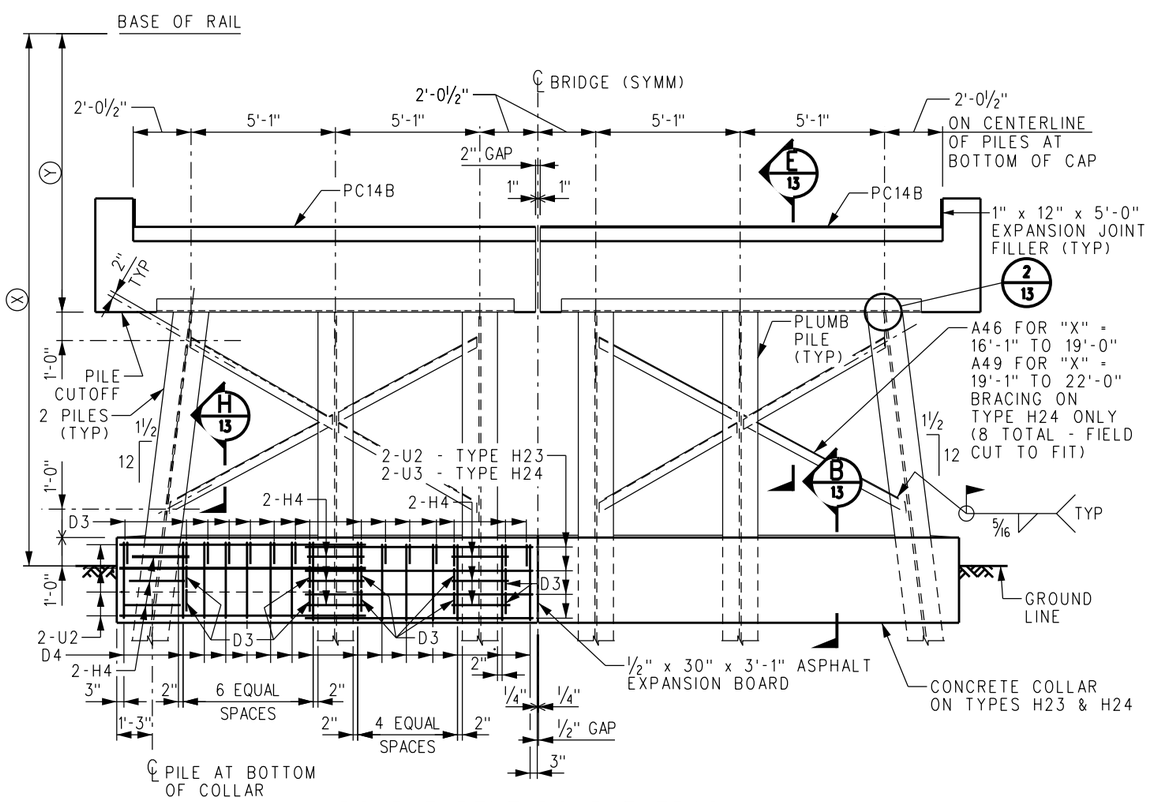

DOUBLE BENT-DOUBLE TRACK

TYPE H22 - "X" = UP TO 12'-0" (NO COLLAR OR BRACING)
TYPE H23 - "X" = 12'-1" TO 16'-0" (COLLAR, NO BRACING)
TYPE H24 - "X" = 16'-1" TO 22'-0" (COLLAR AND BRACING)

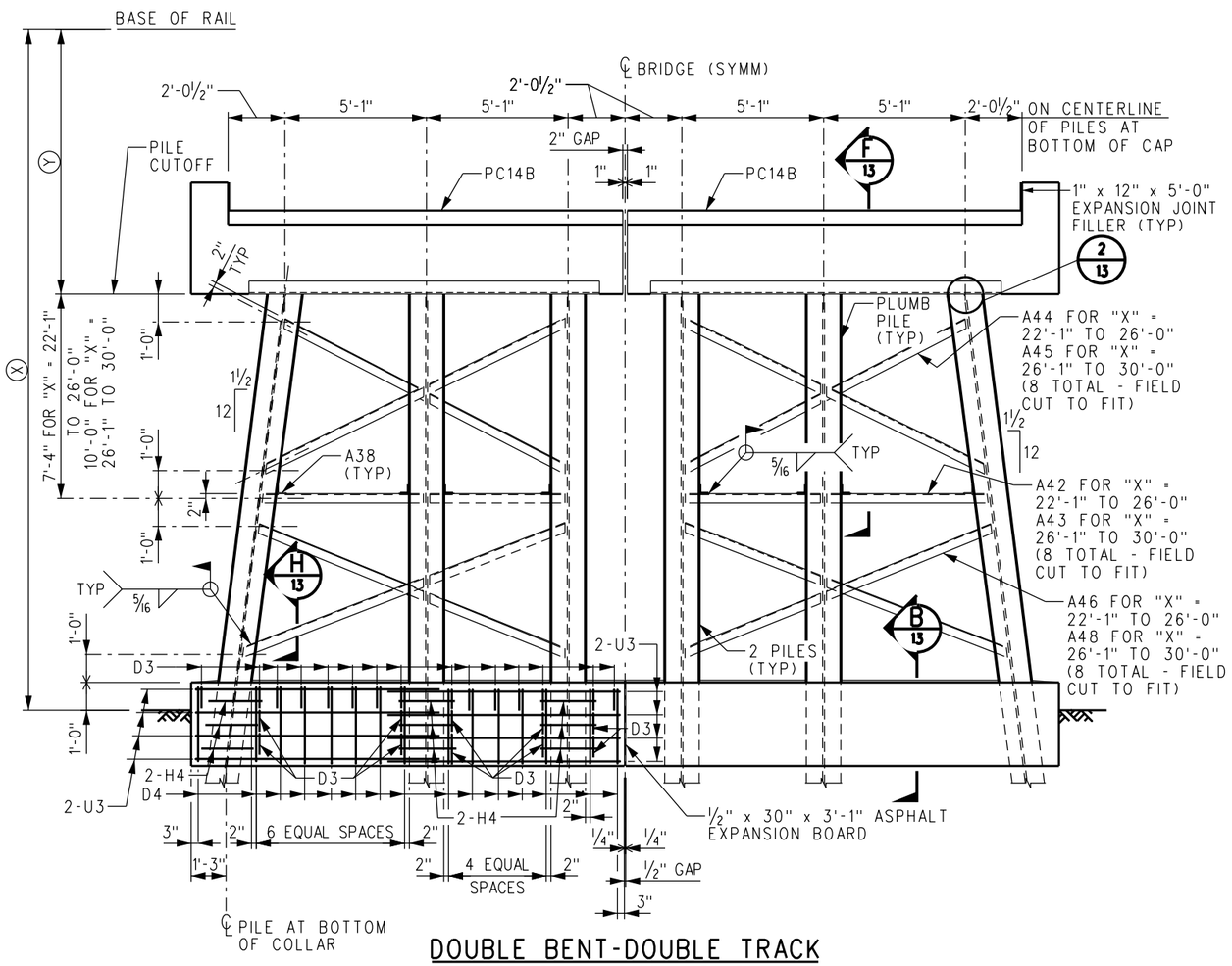

DOUBLE BENT-DOUBLE TRACK

TYPE H25 - "X" = 22'-1" TO 30'-0"

REV.	DATE	DESCRIPTION	DES.	ENG.
X	XX-XX-XX	REVISION	XX	XX

DRAWN BY: A. CARLOS DATE: 03/31/2011

ASSISTANT DIRECTOR: STANDARDS & DESIGN

DIRECTOR OF ENGINEERING AND CONSTRUCTION

METROLINK®
SOUTHERN CALIFORNIA REGIONAL RAIL AUTHORITY
ONE GATEWAY PLAZA, 12TH FLOOR, L. A., CA. 90012

ENGINEERING STANDARDS

DOUBLE ROW PILE BENTS (2 OF 2)
PRECAST/PRESTRESSED CONCRETE
DOUBLE BOX BEAM BRIDGES

STANDARD 6001
SCALE: ⅜" = 1'-0"
REVISION –
SHEET 12 OF 26
CADD FILE: ES6001-12

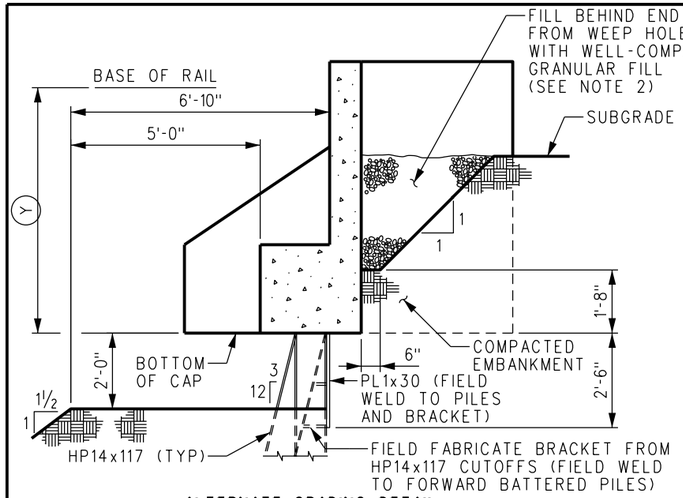

ALTERNATE GRADING DETAIL

DETAIL 7

SCALE: NONE

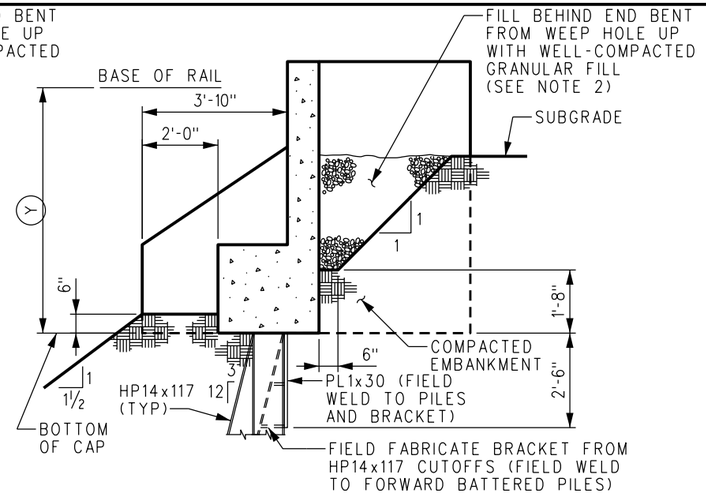

HEAD OF BANK DETAILS

DETAIL 7

SCALE: NONE

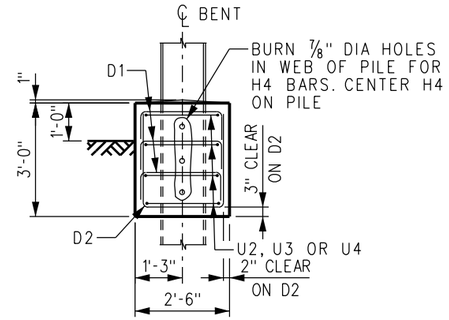

SECTION A A A A (7 8 9 10)

SCALE: ½"=1'-0"

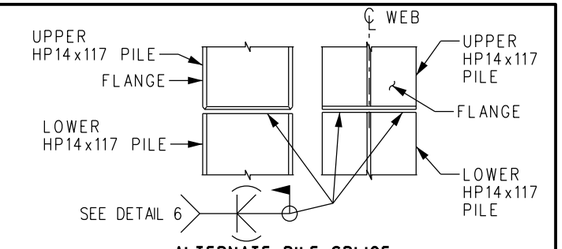

ALTERNATE PILE SPLICE

DETAIL 3

SCALE: 1"=1'-0"

ALTERNATE PILE SPLICING TO BE APPROVED BY ENGINEER

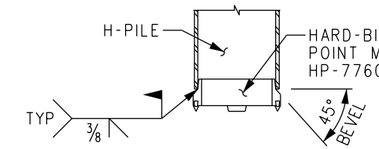

TYPICAL PILE POINT

TIP REINFORCEMENT INSTALLATION INSTRUCTIONS

1. FIT POINT ONTO SQUARE CUT PILE.
2. WELD POINT TO THE PILE IN EITHER FLAT OR VERTICAL POSITION, USING
3. E70XX ELECTRODES. FILL THE AREA ACROSS BOTH FLANGES WITH WELD.

DETAIL 4

SCALE: NONE

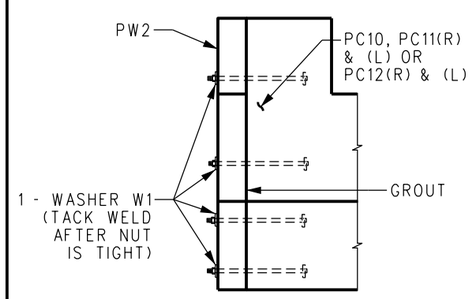

WING WALL TO END CAP DETAIL

DETAIL 1

SCALE: NONE

NOTES:

1. BEFORE BACKFILLING END BENTS APPLY A COATING OF PETROLATUM TO PILE PLATES, CONNECTION BARS, BACKWALL PLATES AND TOP 2'-6" OF PILES.
2. BACKFILL BEHIND END BENTS WITH FREE DRAINING MATERIAL TO THE LIMITS SHOWN ON THIS SHEET. MATERIAL SHALL MEET REQUIREMENTS OF ASTM C33 SPECIFICATION AND SHALL BE A WELL GRADED MIXTURE OF SAND AND GRAVEL WITH THE FOLLOWING GRADATIONS:
   - 100% PASSING THE 1" SIEVE
   - 60% PASSING THE #4 SIEVE
   - 5% PASSING THE #200 SIEVE, MAX
3. "Y" IS THE DISTANCE FROM BASE OF RAIL TO PILE CUTOFF. FOR DESIGN ELEVATIONS, "Y" SHALL BE ESTABLISHED IN COORDINATION WITH SCRRA DIRECTOR OF ENGINEERING AND CONSTRUCTION.

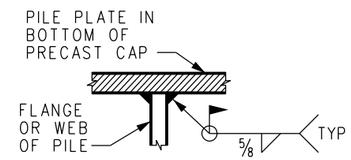

DETAIL AT TOP OF PILES

DETAIL 2 (7 8 9 10) 2 (11 12)

SCALE: NONE

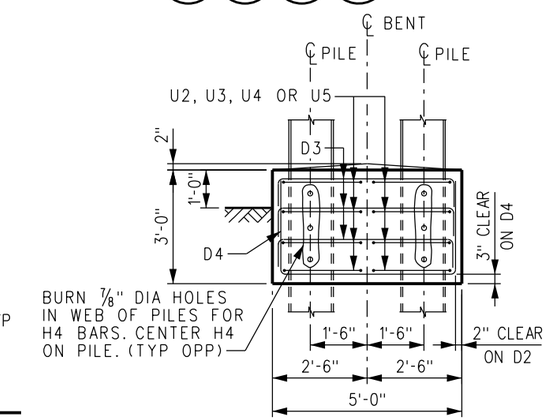

SECTION B B (11 12)

SCALE: ½"=1'-0"

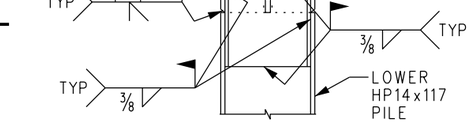

TYPICAL PILE SPLICE

NOTCH PILE WEB TO FIT AROUND SPACER PLATE

DETAIL 5

SCALE: NONE

PILE SPLICE FOR HP14x117 INSTALLATION INSTRUCTIONS:

1. NOTCH THE END OF UPPER LENGTH OF H-PILE (TO ACCOMMODATE THE SPLICE SPACER BAR).
2. FIT SPLICE OVER NOTCHED END OF UPPER H-PILE, AND WELD CORNERS.
3. PLACE THE UPPER SECTION AND SPLICER INTO POSITION ONTO THE LOWER SECTION.
4. WELD ALONG THE OUTSIDE OF THE WEB AND ALONG THE LOWER CORNERS OF THE SPLICE.
5. WELD JOINT BETWEEN UPPER AND LOWER PILE.

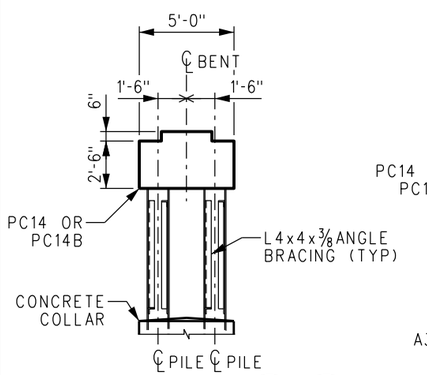

SECTION E E (11 12)

SCALE: NONE

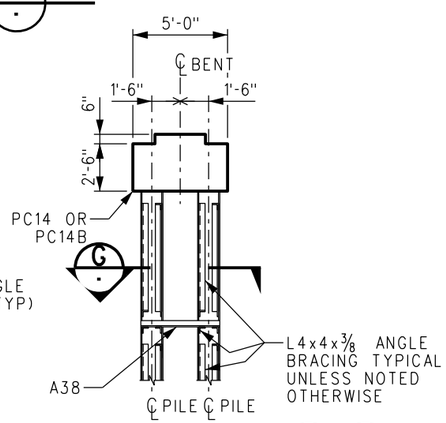

SECTION F F (11 12)

SCALE: NONE

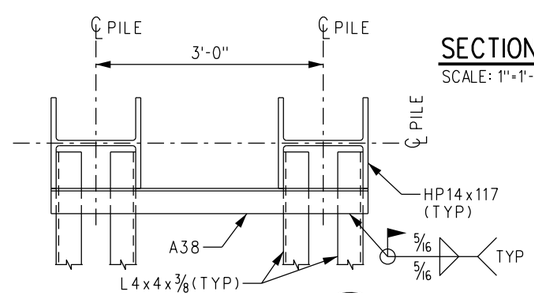

SECTION G

SCALE: 1"=1'-0"

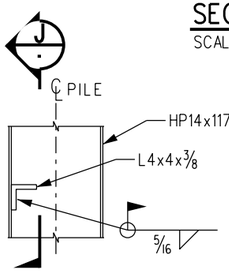

SECTION H H H (7 8 9) H H H (10 11 12)

SCALE: 1"=1'-0"

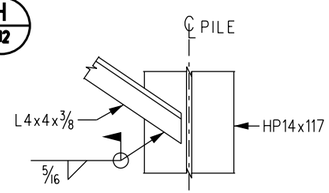

SECTION J

SCALE: 1"=1'-0"

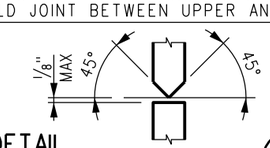

DETAIL 6

SCALE: NONE

REV.	DATE	DESCRIPTION	DES.	ENG.
X	XX-XX-XX	REVISION	XX	XX

DRAWN BY: A. CARLOS DATE: 03/31/2011

ASSISTANT DIRECTOR: STANDARDS & DESIGN

DIRECTOR OF ENGINEERING AND CONSTRUCTION

METROLINK

SOUTHERN CALIFORNIA REGIONAL RAIL AUTHORITY
ONE GATEWAY PLAZA, 12TH FLOOR, L. A., CA. 90012

ENGINEERING STANDARDS

BENT DETAILS
PRECAST/PRESTRESSED CONCRETE
DOUBLE BOX BEAM BRIDGES

STANDARD 6001
SCALE: AS NOTED
REVISION –
SHEET 13 OF 26
CADD FILE: ES6001-13

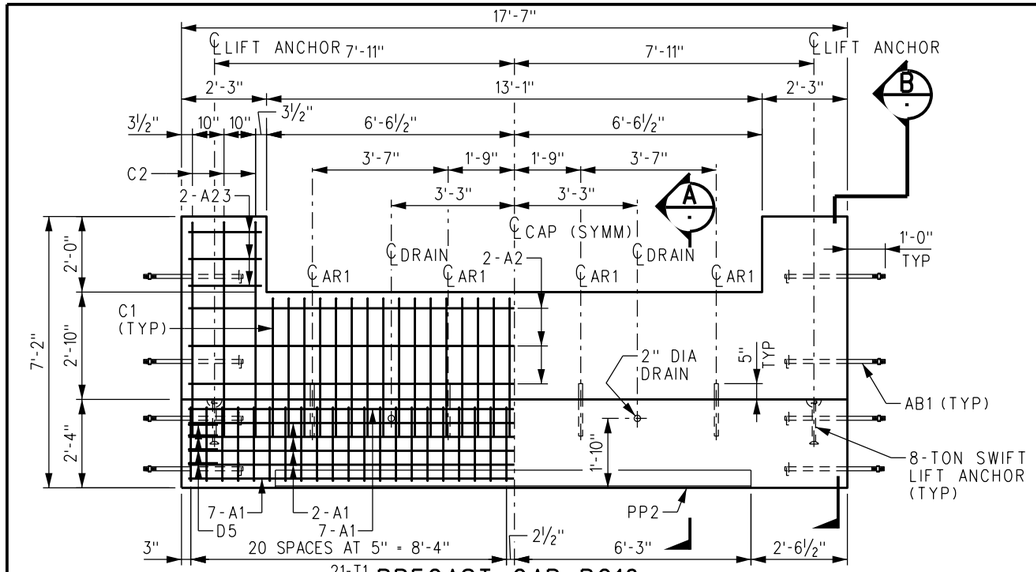

21-T1 **PRECAST CAP PC10**

SCALE: ½"=1'-0
ESTIMATED LIFTING WEIGHT = 12.3 TONS
REQUIRED VOLUME OF CONCRETE = 5.8 CY
WEIGHT OF REINFORCING STEEL = 992 LBS

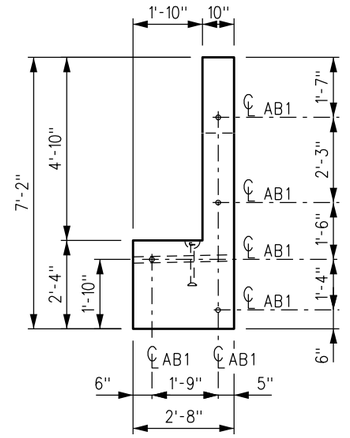

TYPICAL SIDE ELEVATION

SCALE: ½"=1'-0

REINFORCING SCHEDULE

REQUIRED PER PRECAST CAP					DESCRIPTION
PC10	PC11(R)	PC11(L)	PC12(R)	PC12(L)	
22	-	-	-	-	BAR A1, #5 x 17'-3" (STRAIGHT)
6	-	-	-	-	BAR A2, #4 x 17'-3" (STRAIGHT)
-	22	22	22	22	BAR A3, #5 x 15'-6" (STRAIGHT)
-	6	6	6	6	BAR A4, #4 x 15'-6" (STRAIGHT)
12	6	6	6	6	BAR A23, #4 x 1'-11" (STRAIGHT)
32	32	32	33	33	BAR C1, #4 x 7'-10" (SEE DETAIL, SHT 19)
6	4	4	3	3	BAR C2, #4 x 11'-10" (SEE DETAIL, SHT 19)
8	8	8	8	8	BAR D5, #4 x 3'-9" (SEE DETAIL, SHT 19)
42	38	38	38	38	BAR T1, #4 x 9'-10" (SEE DETAIL, SHT 19)

MISCELLANEOUS STEEL SCHEDULE

REQUIRED PER PRECAST CAP					DESCRIPTION
PC10	PC11(R)	PC11(L)	PC12(R)	PC12(L)	
8	4	4	4	4	ANCHOR BOLT AB1, (SEE DETAIL, SHT 18), GALV
4	4	4	4	4	ANCHOR ROD AR1, (SEE DETAIL, SHT 18), GALV
1	1	1	1	1	PILE PLATE PP2, (SEE DETAIL, SHT 18)

NOTES:

1. ALL CONCRETE, CONCRETE WORK AND PLACEMENT OF REINFORCEMENT SHALL BE IN ACCORDANCE WITH SCRRA STANDARD SPECIFICATIONS.
2. THE PORTION OF PILE PLATE PP2 TO BE IN CONTACT WITH CONCRETE SHALL BE CLEANED OF ALL DIRT, OIL AND GREASE AND ALL LOOSE SCALE AND RUST BEFORE CONCRETE IS PLACED.
3. THE ULTIMATE COMPRESSIVE STRENGTH OF CONCRETE SHALL BE NOT LESS THAN 4000 PSI IN 28 DAYS. MAXIMUM SIZE OF COARSE AGGREGATE SHALL BE ONE INCH.
4. MINIMUM CONCRETE COVER ON REINFORCEMENT SHALL BE TWO INCHES.
5. ALL EXPOSED EDGES OF CONCRETE MEMBERS SHALL BE CHAMFERED ¾".
6. CONCRETE MEMBERS SHALL NOT BE REMOVED FROM THE CASTING BED BEFORE THE CONCRETE REACHES A STRENGTH OF 2000 PSI.
7. ANCHOR ROD AR1 MUST BE PLACED WITHIN ¼" OF PLAN LOCATION OR BEAMS WILL NOT FIT.

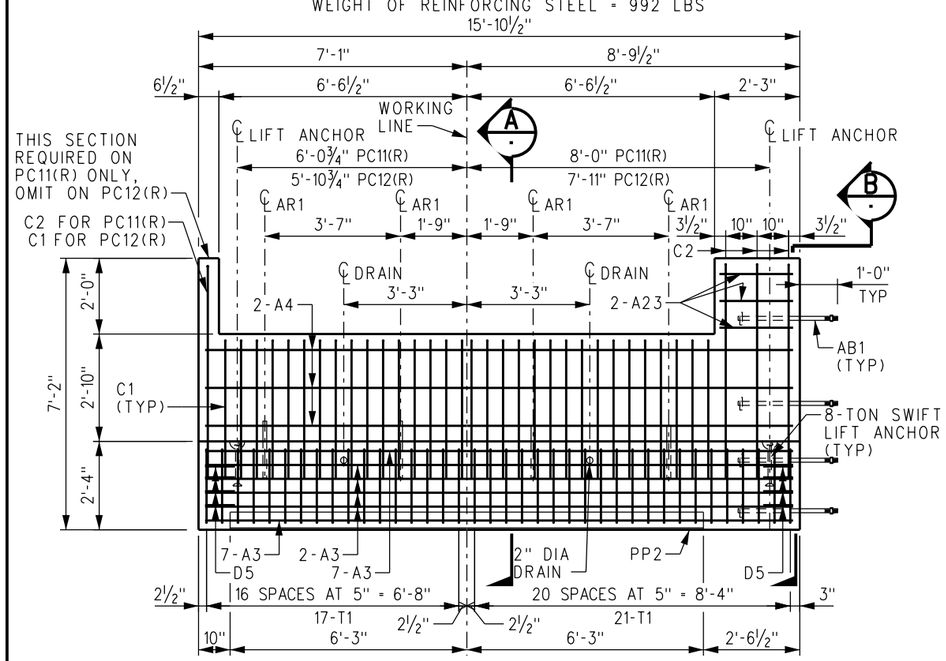

PRECAST CAP PC11(R)

SCALE: ½"=1'-0
ESTIMATED LIFTING WEIGHT = 11.0 TONS
REQUIRED VOLUME OF CONCRETE = 5.1 CY
WEIGHT OF REINFORCING STEEL = 895 LBS
(PRECAST CAP PC11(L) OPPOSITE HAND)

PRECAST CAP PC12(R)

SCALE: ½"=1'-0
ESTIMATED LIFTING WEIGHT = 10.9 TONS
REQUIRED VOLUME OF CONCRETE = 5.1 CY
WEIGHT OF REINFORCING STEEL = 892 LBS
(PRECAST CAP PC12(L) OPPOSITE HAND)

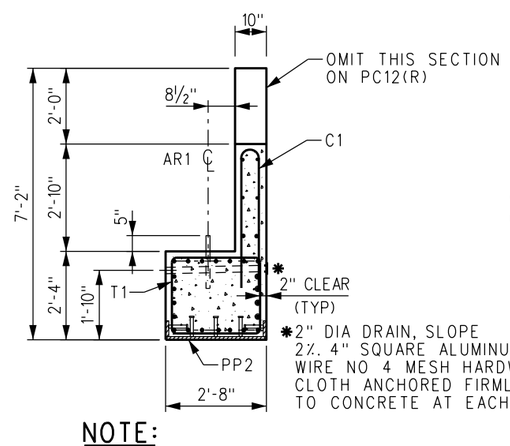

NOTE:

SEE SECTION B FOR BAR DESIGNATIONS NOT SHOWN.

SECTION A

SCALE: ½"=1'-0

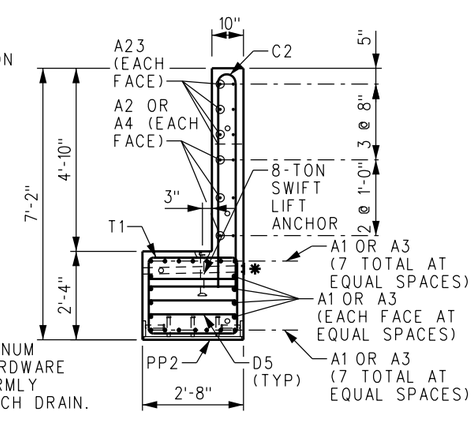

SECTION B

SCALE: ½"=1'-0

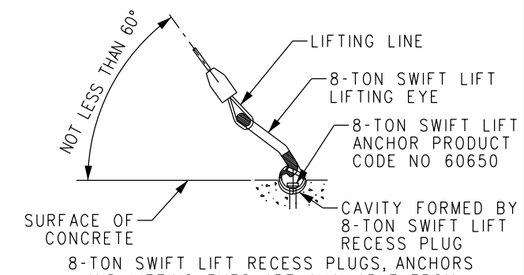

8-TON SWIFT LIFT RECESS PLUGS, ANCHORS AND LIFTING EYES ARE AVAILABLE FROM DAYTON RICHMOND CORPORATION, 9415 SORENSON AVE., SANTA FE SPRINGS, CALIFORNIA 90670, TELEPHONE (714) 522-3442. THE MATERIALS FOR THIS LIFTING SYSTEM ARE NOT INCLUDED IN THE BILL OF MATERIAL BUT ARE TO BE ORDERED AS REQUIRED.

LIFTING DETAIL

SCALE: NONE

REV.	DATE	DESCRIPTION	DES.	ENG.
X	XX-XX-XX	REVISION	XX	XX

DRAWN BY: A. CARLOS DATE: 03/31/2011

ASSISTANT DIRECTOR: STANDARDS & DESIGN

DIRECTOR OF ENGINEERING AND CONSTRUCTION

METROLINK®
SOUTHERN CALIFORNIA REGIONAL RAIL AUTHORITY
ONE GATEWAY PLAZA, 12TH FLOOR, L. A., CA. 90012

ENGINEERING STANDARDS

PRECAST CONCRETE MEMBERS (1 OF 3)
PRECAST/PRESTRESSED CONCRETE
DOUBLE BOX BEAM BRIDGES

STANDARD 6001
SCALE: AS NOTED
REVISION –
SHEET 14 OF 26
CADD FILE: ES6001-14

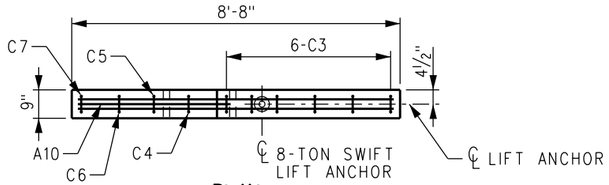

PLAN

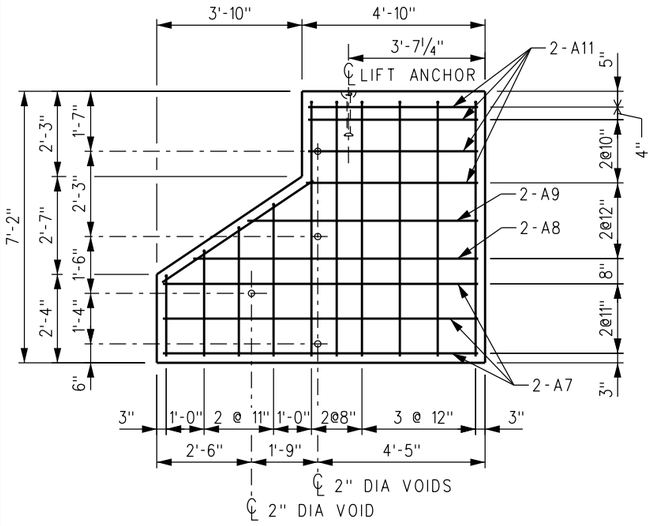

ELEVATION

PRECAST WING WALL PW2

SCALE: ½" = 1'-0"
ESTIMATED LIFTING WEIGHT = 2.7 TONS
REQUIRED VOLUME OF CONCRETE = 1.4 CY
WEIGHT OF REINFORCING STEEL = 153 LBS

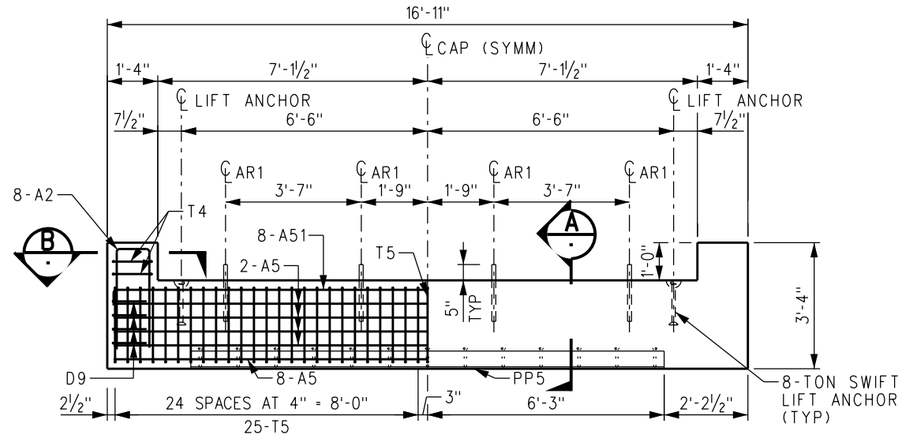

PRECAST CAP PC13

SCALE: ½" = 1'-0"
ESTIMATED LIFTING WEIGHT = 10.5 TONS
REQUIRED VOLUME OF CONCRETE = 4.8 CY
WEIGHT OF REINFORCING STEEL = 1186 LBS

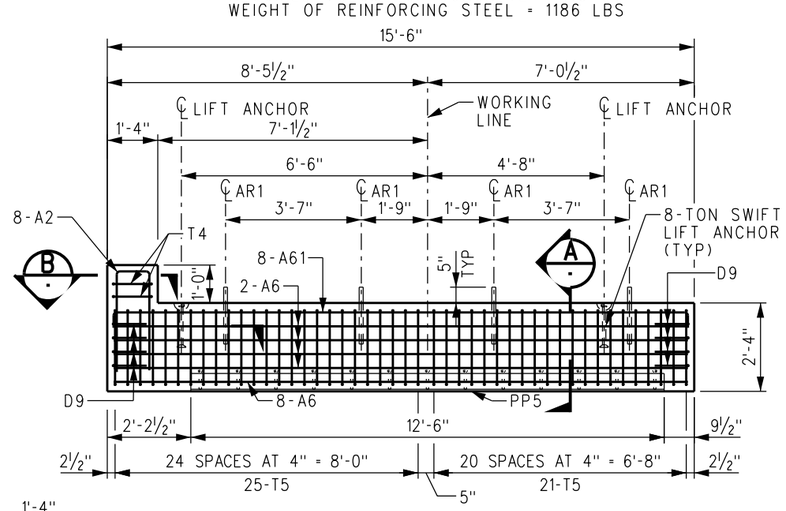

PRECAST CAP PC13B

SCALE: ½" = 1'-0"
ESTIMATED LIFTING WEIGHT = 9.4 TONS
REQUIRED VOLUME OF CONCRETE = 4.3 CY
WEIGHT OF REINFORCING STEEL = 1009 LBS

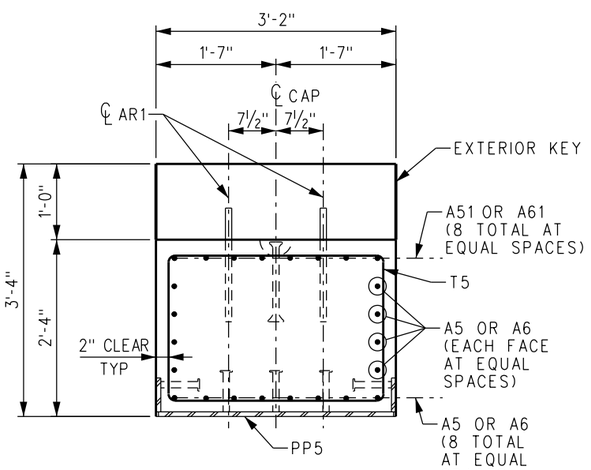

SECTION A
SCALE: 1"=1'-0

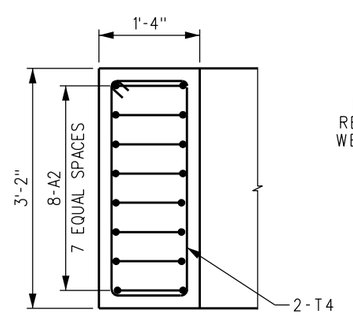

SECTION B
SCALE: 1"=1'-0

REINFORCING SCHEDULE

REQUIRED PER PRECAST CAP					DESCRIPTION
PC14	PC14B	PC13	PC13B	PW2	
26	-	16	-	-	BAR A5, #6 x 16'-7" (STRAIGHT)
-	26	-	16	-	BAR A6, #6 x 15'-2" (STRAIGHT)
-	-	-	-	6	BAR A7, #4 x 8'-4" (STRAIGHT)
-	-	-	-	2	BAR A8, #4 x 7'-7" (STRAIGHT)
-	-	-	-	2	BAR A9, #4 x 6'-1" (STRAIGHT)
-	-	-	-	1	BAR A10, #4 x 4'-9" (STRAIGHT)
-	-	-	-	8	BAR A11, #4 x 4'-6" (STRAIGHT)
28	14	-	-	8	BAR A12, #6 x 7'-0" (SEE DETAIL, SHT 19)
-	-	-	-	6	BAR C3, #4 x 14'-1" (SEE DETAIL, SHT 19)
-	-	-	-	1	BAR C4, #4 x 8'-5" (SEE DETAIL, SHT 19)
-	-	-	-	1	BAR C5, #4 x 7'-3" (SEE DETAIL, SHT 19)
-	-	-	-	1	BAR C6, #4 x 5'-11" (SEE DETAIL, SHT 19)
-	-	-	-	1	BAR C7, #4 x 4'-7" (SEE DETAIL, SHT 19)
8	8	-	-	-	BAR D3, #4 x 6'-1" (SEE DETAIL, SHT 19)
-	-	8	8	-	BAR D9, #4 x 4'-3" (SEE DETAIL, SHT 19)
-	-	51	46	-	BAR T5, #4 x 10'-10" (SEE DETAIL, SHT 19)
40	37	-	-	-	BAR T2, #4 x 12'-2" (SEE DETAIL, SHT 19)
40	37	-	-	-	BAR T3, #4 x 14'-10" (SEE DETAIL, SHT 19)
8	-	8	-	-	BAR A51, #6 x 17'-11" (SEE DETAIL, SHT 19)
-	8	-	8	-	BAR A61, #6 x 16'-6" (SEE DETAIL, SHT 19)
4	2	4	2	-	BAR T4, #5 x 8'-6" (SEE DETAIL, SHT 19)
-	-	16	8	-	BAR A2, #6 x 6'-0" (SEE DETAIL, SHT 19)

MISCELLANEOUS STEEL SCHEDULE

REQUIRED PER PRECAST CAP					DESCRIPTION
PC14	PC14B	PC13	PC13B	PW2	
8	8	8	8	-	ANCHOR ROD AR1 (SEE DETAIL, SHT 18), GALV
-	-	1	1	-	PILE PLATE PP5, (SEE DETAIL, SHT 18)
1	1	-	-	-	PILE PLATE PP3, (SEE DETAIL, SHT 18)

NOTES:

1. ALL CONCRETE, CONCRETE WORK AND PLACEMENT OF REINFORCEMENT SHALL BE IN ACCORDANCE WITH SCRRA STANDARD SPECIFICATIONS.
2. THE PORTION OF PILE PLATE PP3 OR PP5 TO BE IN CONTACT WITH CONCRETE SHALL BE CLEANED OF ALL DIRT, OIL AND GREASE AND ALL LOOSE SCALE AND RUST BEFORE CONCRETE IS PLACED.
3. THE ULTIMATE COMPRESSIVE STRENGTH OF CONCRETE SHALL BE NOT LESS THAN 4000 PSI IN 28 DAYS. MAXIMUM SIZE OF COARSE AGGREGATE SHALL BE ONE INCH.
4. MINIMUM CONCRETE COVER ON REINFORCEMENT SHALL BE TWO INCHES.
5. ALL EXPOSED EDGES OF CONCRETE MEMBERS SHALL BE CHAMFERED ¾".
6. CONCRETE MEMBERS SHALL NOT BE REMOVED FROM THE CASTING BED BEFORE THE CONCRETE REACHES A STRENGTH OF 2000 PSI.
7. ANCHOR ROD AR1 MUST BE PLACED WITHIN ¼" OF PLAN LOCATION OR BEAMS WILL NOT FIT.

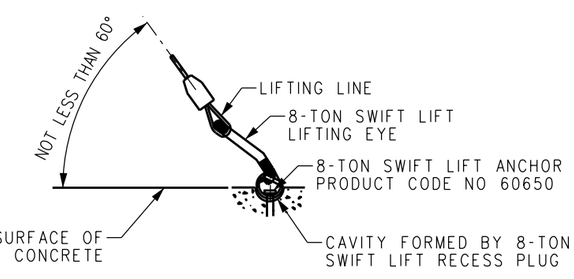

8-TON SWIFT LIFT RECESS PLUGS, ANCHORS AND LIFTING EYES ARE AVAILABLE FROM DAYTON RICHMOND CORPORATION, 9415 SORENSON AVE., SANTA FE SPRINGS, CALIFORNIA 90670, TELEPHONE (714) 522-3442. THE MATERIALS FOR THIS LIFTING SYSTEM ARE NOT INCLUDED IN THE BILL OF MATERIAL BUT ARE TO BE ORDERED AS REQUIRED.

LIFTING DETAIL

SCALE: NONE

REV.	DATE	DESCRIPTION	DES.	ENG.
X	XX-XX-XX	REVISION	XX	XX

DRAWN BY: A. CARLOS DATE: 03/31/2011

ASSISTANT DIRECTOR: STANDARDS & DESIGN

DIRECTOR OF ENGINEERING AND CONSTRUCTION

METROLINK®
SOUTHERN CALIFORNIA REGIONAL RAIL AUTHORITY
ONE GATEWAY PLAZA, 12TH FLOOR, L. A., CA. 90012

ENGINEERING STANDARDS

PRECAST CONCRETE MEMBERS (2 OF 3)
PRECAST/PRESTRESSED CONCRETE
DOUBLE BOX BEAM BRIDGES

STANDARD 6001
SCALE: AS NOTED
REVISION –
SHEET 15 OF 26
CADD FILE: ES6001-15

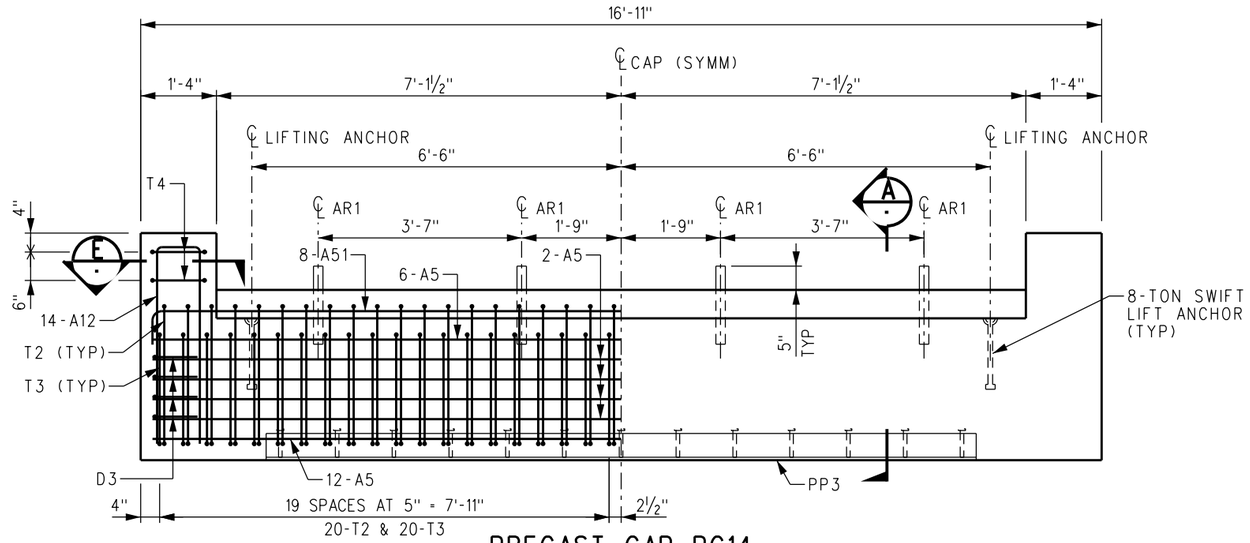

PRECAST CAP PC14

ESTIMATED LIFTING WEIGHT = 19.7 TONS
REQUIRED VOLUME OF CONCRETE = 9.3 CY
WEIGHT OF REINFORCING STEEL = 1947 LBS

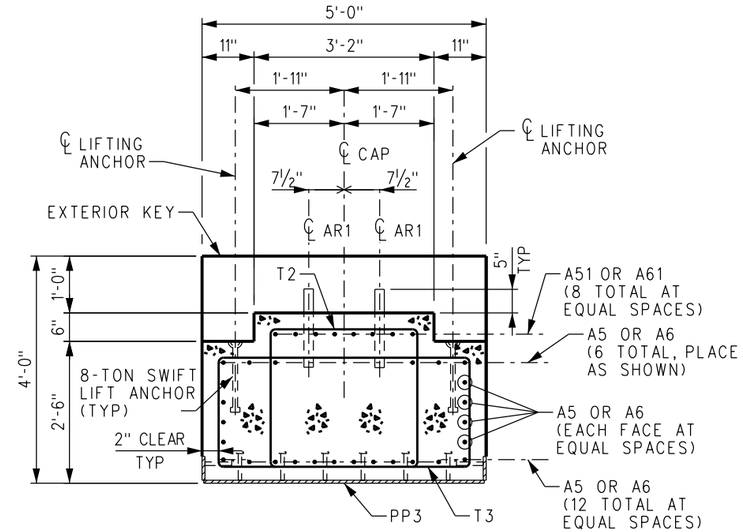

SECTION D

SCALE: 1"=1'-0

NOTES:

1. FOR NOTES, LIFTING DETAIL AND SCHEDULES SEE SHEET 15.
2. ANCHOR ROD AR1 MUST BE PLACED WITHIN ¼" OF PLAN LOCATION OR BEAMS WILL NOT FIT.

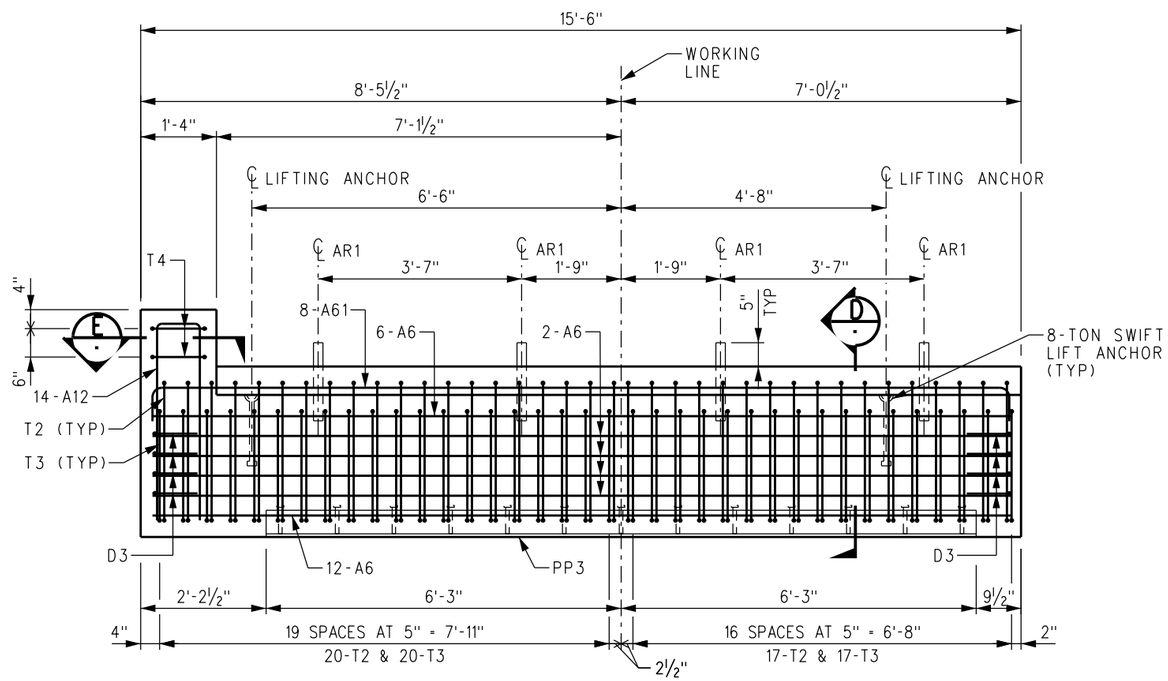

PRECAST CAP PC14B

ESTIMATED LIFTING WEIGHT = 17.6 TONS
REQUIRED VOLUME OF CONCRETE = 8.2 CY
WEIGHT OF REINFORCING STEEL = 1656 LBS

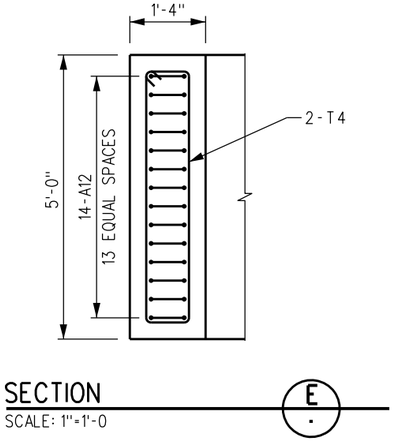

SECTION E

SCALE: 1"=1'-0

REV.	DATE	DESCRIPTION	DES.	ENG.
X	XX-XX-XX	REVISION	XX	XX

DRAWN BY: A. CARLOS DATE: 03/31/2011

ASSISTANT DIRECTOR: STANDARDS & DESIGN

DIRECTOR OF ENGINEERING AND CONSTRUCTION

METROLINK®
SOUTHERN CALIFORNIA REGIONAL RAIL AUTHORITY
ONE GATEWAY PLAZA, 12TH FLOOR, L. A., CA. 90012

ENGINEERING STANDARDS

PRECAST CONCRETE MEMBERS (3 OF 3)
PRECAST/PRESTRESSED CONCRETE
DOUBLE BOX BEAM BRIDGES

STANDARD 6001
SCALE: ¾" = 1'-0"
REVISION –
SHEET 16 OF 26
CADD FILE: ES6001-16

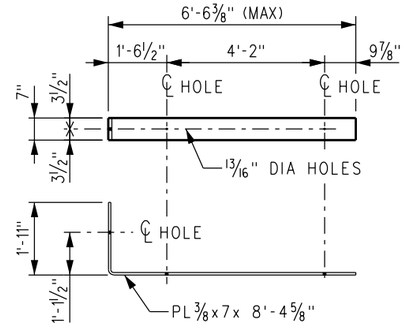

DECK PLATE DP1

SCALE: 1/2" = 1'-0"
WEIGHT = 74.9 LBS
GALVANIZE AFTER FABRICATION

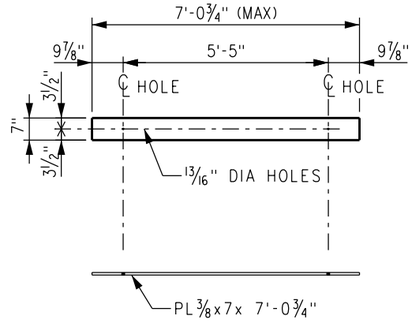

DECK PLATE DP3

SCALE: 1/2" = 1'-0"
WEIGHT = 63.1 LBS
GALVANIZE AFTER FABRICATION

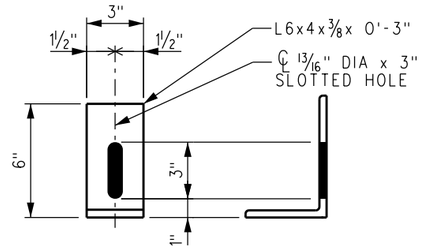

CURB ANGLE CA2

SCALE: 3" = 1'-0"
WEIGHT = 3.1 LBS
GALVANIZE AFTER FABRICATION

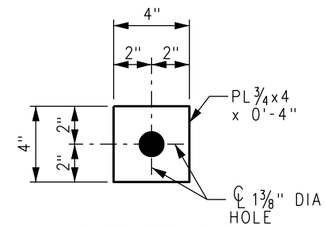

WASHER W1

SCALE: 3" = 1'-0"
WEIGHT = 3.4 LBS
GALVANIZE AFTER FABRICATION

MATERIAL NOTES:

1. STRUCTURAL STEEL BARS, STEEL PLATES AND ANGLES SHALL MEET THE REQUIREMENTS OF THE CURRENT ASTM DESIGNATION: A36.
2. SHEAR CONNECTOR STUDS SHALL MEET THE REQUIREMENTS OF SECTION 7 OF THE CURRENT AWS STRUCTURAL WELDING CODE D1.1 FOR GRADE 1020 SOLID FLUX FILLED HEADED STUDS.

SHOP NOTES:

1. FABRICATION AND ARC WELDING OF STRUCTURAL STEEL SHALL BE IN ACCORDANCE WITH SCRRA STANDARD SPECIFICATIONS.
2. GRIND EXPOSED WELDS SMOOTH.
3. OPEN HOLES: AS NOTED. - SHOP PAINT: NONE.
4. SHEAR CONNECTOR STUDS SHALL AUTOMATICALLY BE END WELDED WITH COMPLETE FUSION IN ACCORDANCE WITH APPENDIX VI OF THE CURRENT AWS STRUCTURAL WELDING CODE D1.1.
5. GALVANIZING: CP1, CP2, CP3, AR1, DP1, DP3, DP27, DP32, DP34, W1, AB1, LB1, CA2, CONDUIT BRACKET AND SIDEWALK BRACKET SHALL BE GALVANIZED AFTER FABRICATION IN ACCORDANCE WITH THE CURRENT ASTM DESIGNATION: A123 AND A153 AS APPLICABLE. AFTER GALVANIZING, ALL ELEMENTS SHALL BE FREE OF ABRASIONS, ROUGH OR SHARP EDGES, AND OTHER SURFACE DEFECTS.
6. NUTS SHALL BE TAPPED OVERSIZE TO FIT GALVANIZED THREADS AND BRUSHED AFTER GALVANIZING TO PERMIT ROTATION ON THE THREADED ROD.
7. AB1 AND LB1 SHALL BE SHIPPED WITH THE NUT ON THE THREADED ROD.

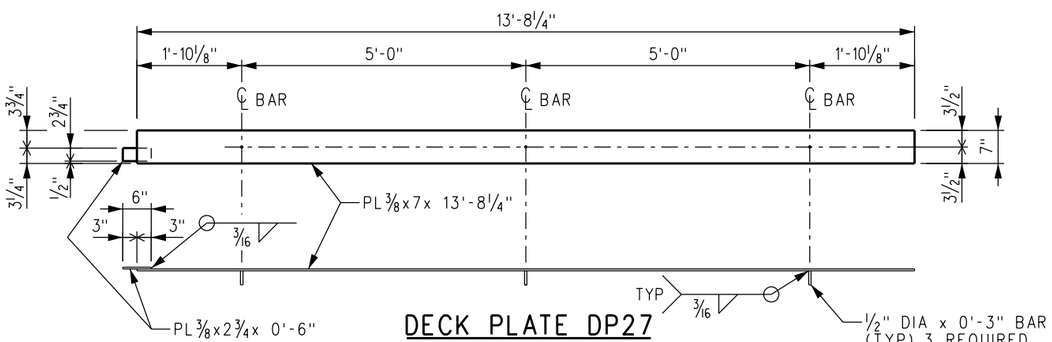

DECK PLATE DP27

SCALE: 3/4" = 1'-0"
WEIGHT = 124.5 LBS
GALVANIZE AFTER FABRICATION

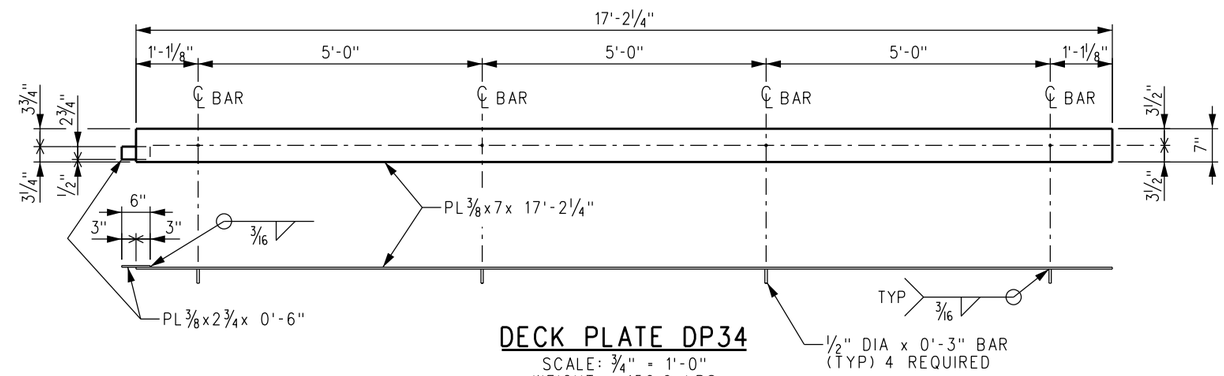

DECK PLATE DP34

SCALE: 3/4" = 1'-0"
WEIGHT = 156.0 LBS
GALVANIZE AFTER FABRICATION

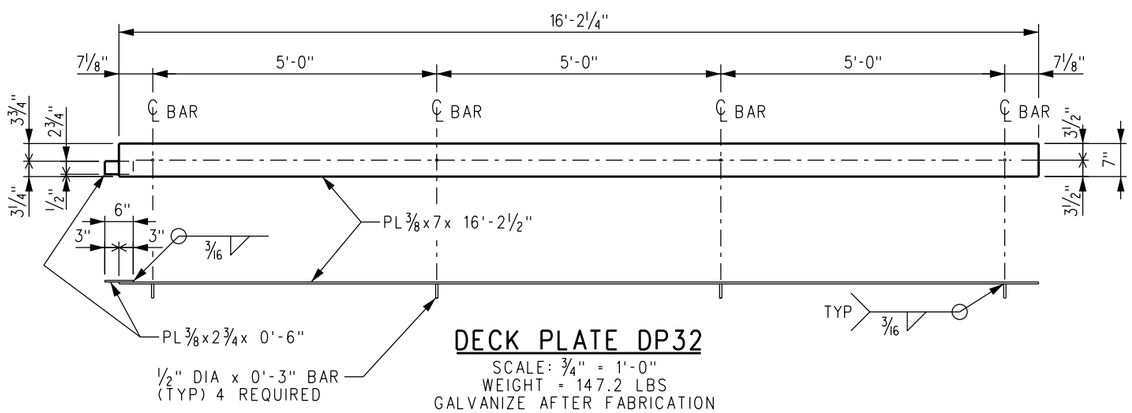

DECK PLATE DP32

SCALE: 3/4" = 1'-0"
WEIGHT = 147.2 LBS
GALVANIZE AFTER FABRICATION

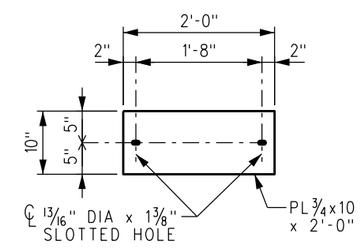

DECK PLATE CP1

SCALE: 1" = 1'-0"
WEIGHT = 51.0 LBS
GALVANIZE AFTER FABRICATION

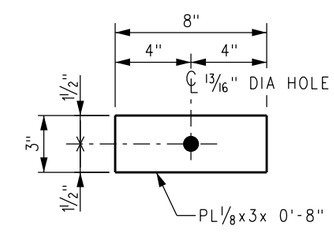

CURB PLATE CP2

SCALE: 3" = 1'-0"
WEIGHT = 1.0 LBS
GALVANIZE AFTER FABRICATION

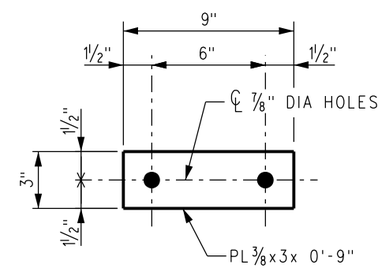

CURB PLATE CP3

SCALE: 3" = 1'-0"
WEIGHT = 2.9 LBS
GALVANIZE AFTER FABRICATION

REV.	DATE	DESCRIPTION	DES.	ENG.
X	XX-XX-XX	REVISION	XX	XX

DRAWN BY: A. CARLOS DATE: 03/31/2011

ASSISTANT DIRECTOR: STANDARDS & DESIGN

DIRECTOR OF ENGINEERING AND CONSTRUCTION

METROLINK®
SOUTHERN CALIFORNIA REGIONAL RAIL AUTHORITY
ONE GATEWAY PLAZA, 12TH FLOOR, L. A., CA. 90012

ENGINEERING STANDARDS

STEEL DETAILS (1 OF 2)
PRECAST/PRESTRESSED CONCRETE
DOUBLE BOX BEAM BRIDGES

STANDARD 6001
SCALE: AS NOTED
REVISION –
SHEET 17 OF 26
CADD FILE: ES6001-17

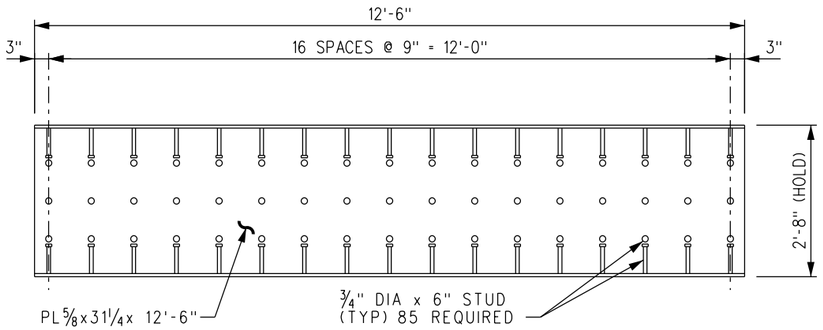

PILE PLATE PP2

SCALE: 1/2" = 1'-0"
WEIGHT = 1170 LBS

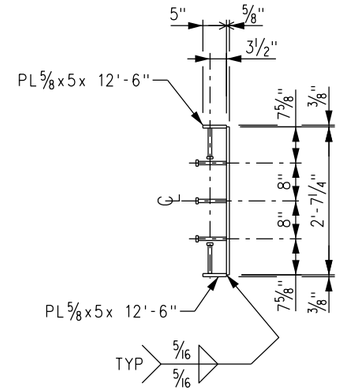

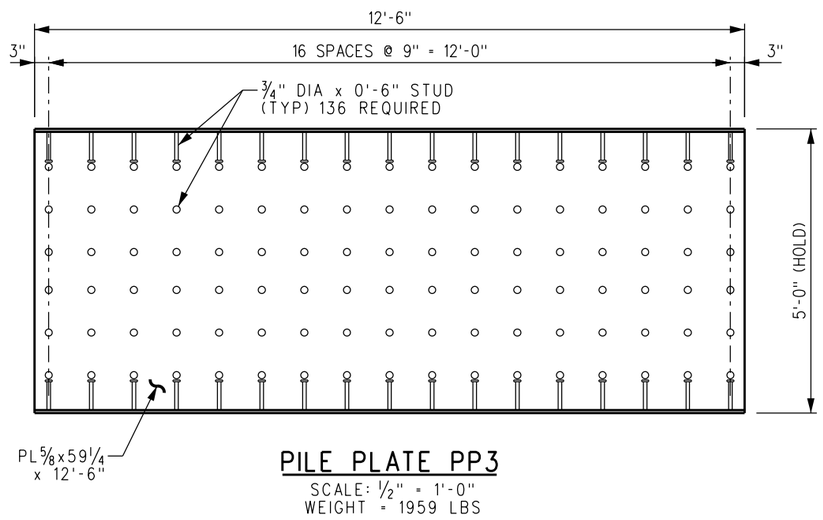

PILE PLATE PP3

SCALE: 1/2" = 1'-0"
WEIGHT = 1959 LBS

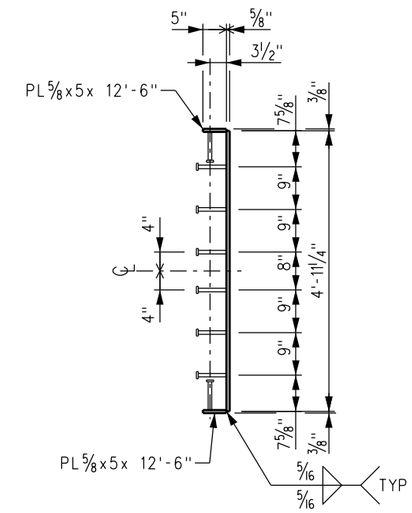

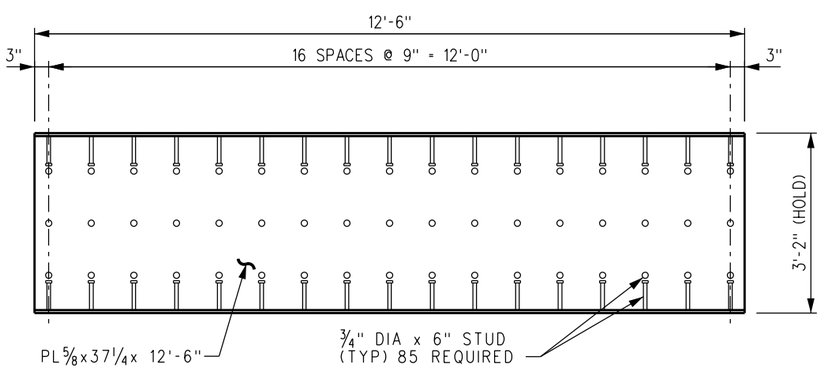

PILE PLATE PP5

SCALE: 1/2" = 1'-0"
WEIGHT = 1330 LBS

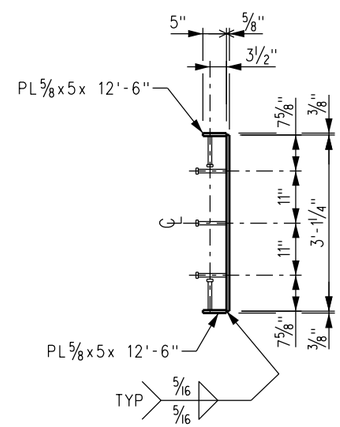

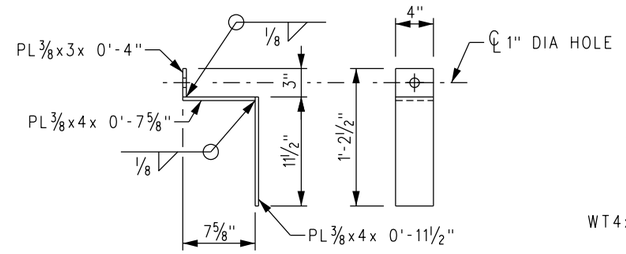

CONDUIT BRACKET

SCALE: 1 1/2" = 1'-0"
WEIGHT = 9.4 LBS
GALVANIZE AFTER FABRICATION

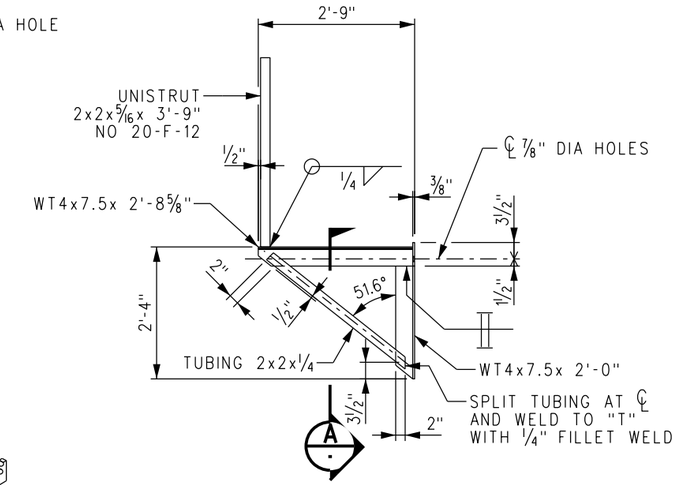

STANDARD SIDEWALK BRACKET

SCALE: 3/4" = 1'-0"
WEIGHT = 66 LBS
GALVANIZE AFTER FABRICATION

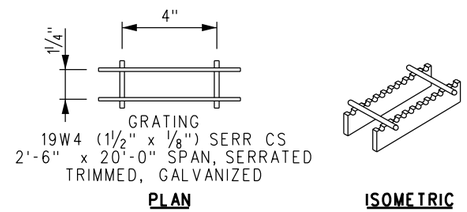

GRATING DETAIL

SCALE: NONE

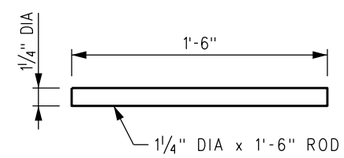

ANCHOR ROD AR1

SCALE: 1 1/2" = 1'-0"
WEIGHT = 6.3 LBS
GALVANIZE AFTER FABRICATION

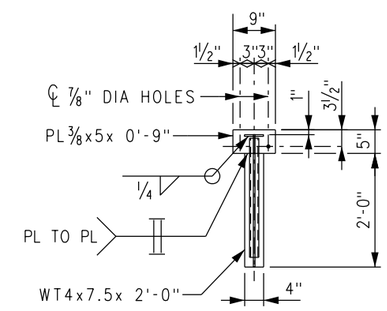

SECTION A

SCALE: 3/4"=1'-0

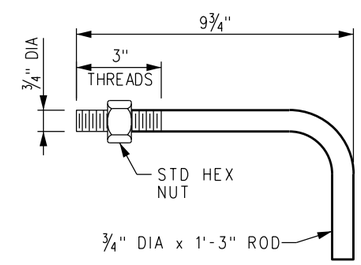

BOLT LB1

SCALE: 3" = 1'-0"
WEIGHT = 2.0 LBS
GALVANIZE AFTER FABRICATION

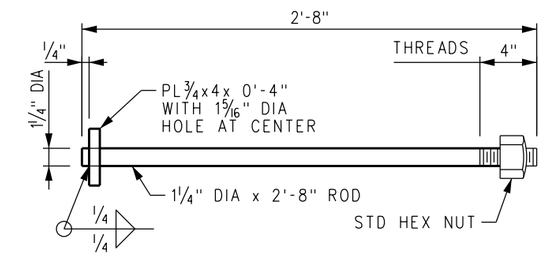

ANCHOR BOLT AB1

SCALE: 1 1/2" = 1'-0"
WEIGHT = 14.5 LBS
GALVANIZE AFTER FABRICATION

NOTE:
FOR MATERIAL NOTES AND SHOP NOTES, SEE SHEET 17.

REV.	DATE	DESCRIPTION	DES.	ENG.
X	XX-XX-XX	REVISION	XX	XX

DRAWN BY: A. CARLOS DATE: 03/31/2011

ASSISTANT DIRECTOR: STANDARDS & DESIGN

DIRECTOR OF ENGINEERING AND CONSTRUCTION

METROLINK
SOUTHERN CALIFORNIA REGIONAL RAIL AUTHORITY
ONE GATEWAY PLAZA, 12TH FLOOR, L. A., CA. 90012

ENGINEERING STANDARDS

STEEL DETAILS (2 OF 2)
PRECAST/PRESTRESSED CONCRETE
DOUBLE BOX BEAM BRIDGES

STANDARD 6001
SCALE: AS NOTED
REVISION –
SHEET 18 OF 26
CADD FILE: ES6001-18

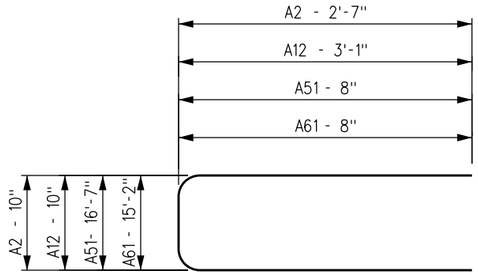

BAR A2, A12, A51 & A61
SCALE: 1½" = 1'-0"

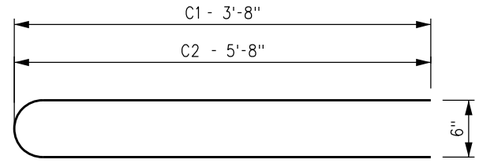

BARS C1 & C2
SCALE: 1½" = 1'-0"

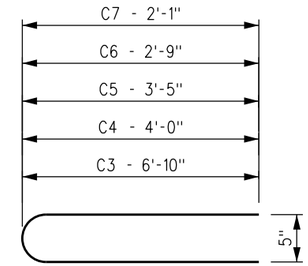

BARS C3 THRU C7
SCALE: 1½" = 1'-0"

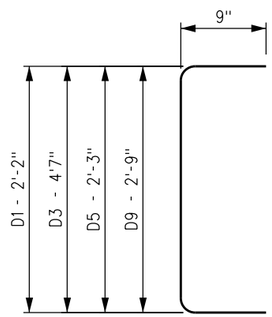

BAR D1, D3, D5 & D9
SCALE: 1½" = 1'-0"

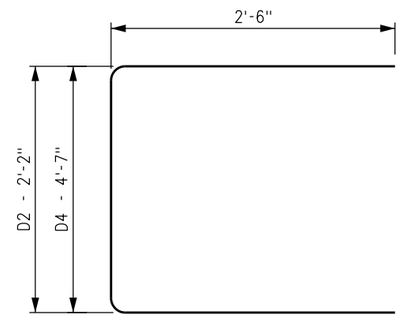

BAR D2 & D4
SCALE: 1½" = 1'-0"

NOTES:

1. ALL DIMENSIONS SHOWN ARE OUT TO OUT OF BARS.
2. BEND #4 BARS AROUND 3" DIA PIN (EXCEPT C1 THRU C7 BARS, WHICH SHALL BE BENT AROUND 5" DIA PIN FOR C1 AND C2 AND 4" DIA PIN FOR C3 THRU C7), #5 BARS AROUND 3¾" DIA PIN AND #6 BARS AROUND 4½" DIA PIN.
3. MILD STEEL REINFORCEMENT SHALL MEET THE REQUIREMENTS OF THE CURRENT ASTM DESIGNATION: A615, GRADE 60 OR A706.
4. FABRICATION OF REINFORCEMENT SHALL BE IN ACCORDANCE WITH CHAPTER 7 OF THE CURRENT CSRI MANUAL OF STANDARD PRACTICE.

BENT BAR SCHEDULE

MARK	DESCRIPTION
A2	#6 x 6'-0"
A12	#6 x 7'-0"
A51	#6 x 17'-11"
A61	#6 x 16'-6"
C1	#4 x 7'-10"
C2	#4 x 11'-10"
C3	#4 x 14'-1"
C4	#4 x 8'-5"
C5	#4 x 7'-3"
C6	#4 x 5'-11"
C7	#4 x 4'-7"
D1	#4 x 3'-8"
D2	#4 x 7'-2"
D3	#4 x 6'-1"
D4	#4 x 9'-7"
D5	#4 x 3'-9"
D9	#4 x 4'-3"
T1	#4 x 9'-10"
T2	#4 x 12'-2"
T3	#4 x 14'-10"
T4	#5 x 8'-6"
T5	#4 x 10'-10"
U2	#4 x 18'-8"
U3	#4 x 20'-8"
U4	#4 x 23'-6"

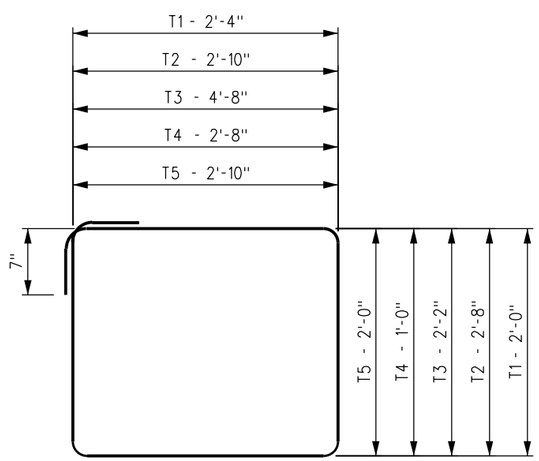

BARS T1, T2, T3, T4 & T5
SCALE: 1½" = 1'-0"

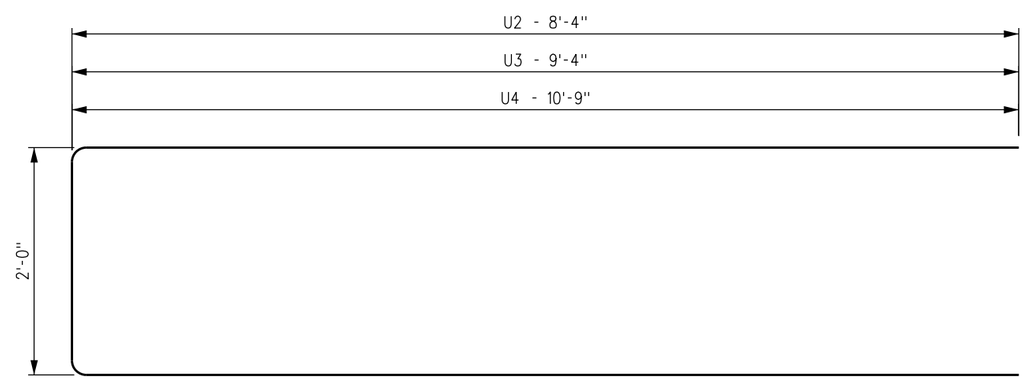

BARS U2, U3 & U4
SCALE: 1½" = 1'-0"

REV.	DATE	DESCRIPTION	DES.	ENG.
X	XX-XX-XX	REVISION	XX	XX

DRAWN BY: A. CARLOS DATE: 03/31/2011

ASSISTANT DIRECTOR: STANDARDS & DESIGN

DIRECTOR OF ENGINEERING AND CONSTRUCTION

METROLINK®
SOUTHERN CALIFORNIA REGIONAL RAIL AUTHORITY
ONE GATEWAY PLAZA, 12TH FLOOR, L. A., CA. 90012

ENGINEERING STANDARDS

REINFORCING STEEL DETAILS
PRECAST/PRESTRESSED CONCRETE
DOUBLE BOX BEAM BRIDGES

STANDARD 6001
SCALE: 1½" = 1'-0"
REVISION –
SHEET 19 OF 26
CADD FILE: ES66001-19

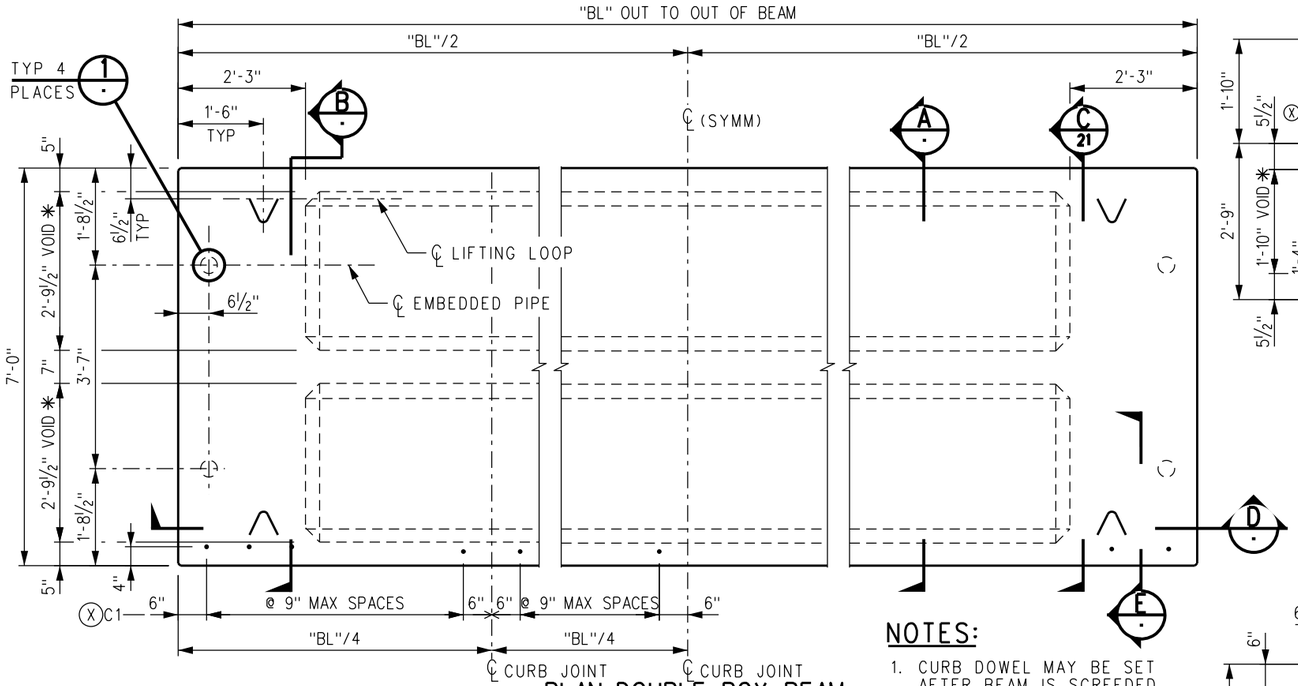

PLAN-DOUBLE BOX BEAM

SCALE: NONE

NOTES:

1. CURB DOWEL MAY BE SET AFTER BEAM IS SCREEDED. ADJUST AS REQUIRED TO MISS OTHER REINFORCEMENT.
2. CURB JOINT INCLUDES 2" x 6" DRAIN OPENING WITH ½" x 6" x 1'-9" ASPHALT EXPANSION BOARD IN CURB EXPANSION JOINT.

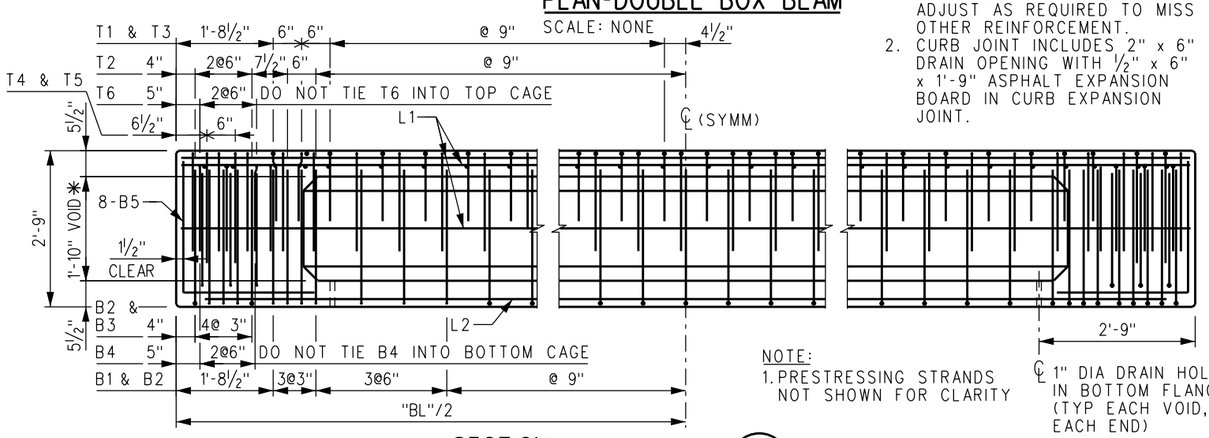

NOTE:
1. PRESTRESSING STRANDS NOT SHOWN FOR CLARITY

SECTION D

SCALE: NONE

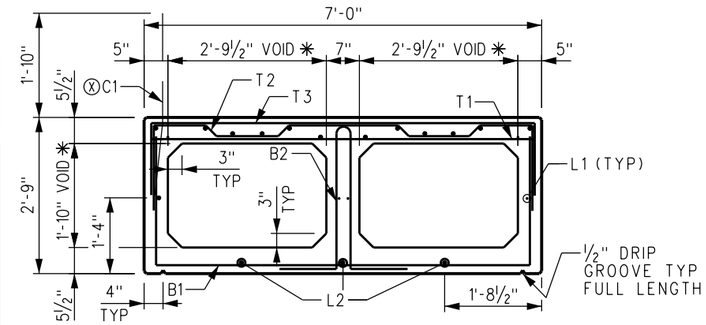

Ⓧ REQUIRED FOR BEAM WITH CURB ONLY

✱ VOID DIMENSIONS SHOWN ARE MAXIMUM AND MUST NOT BE EXCEEDED AT ANY POINT INCLUDING SPLICES OF VOID FORMS

TOP OF BEAM TO BE GIVEN A STEEL TROWEL FINISH. ALL STEEL TO HAVE AT LEAST 1½" COVER UNLESS OTHERWISE NOTED. SEE SECTION "C" ON SHEET 21 FOR LOCATION OF PRESTRESSING STRANDS.

SECTION A

SCALE: ¾" = 1'-0"

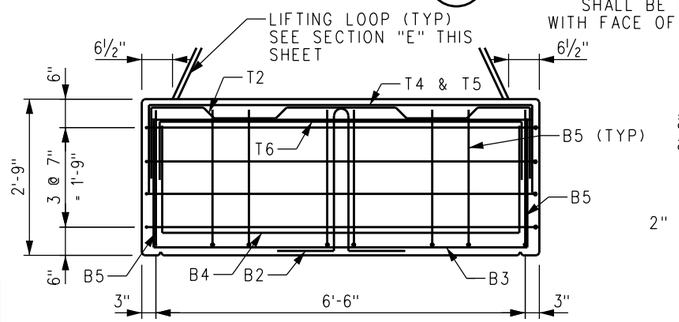

SECTION B

SCALE: ¾" = 1'-0"

BARS C1, L1 AND L2 NOT SHOWN DIMENSIONS AND DETAILS NOT SHOWN TO BE SAME AS SHOWN IN SECTION "A"
BARS B1, T1 AND T3 NOT USED AT ENDS OF BEAMS

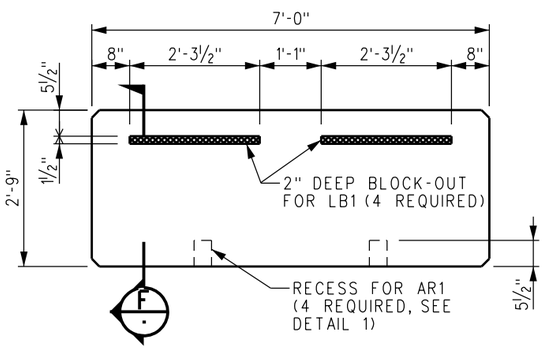

END VIEW-DOUBLE BOX BEAM

SCALE: ¾" = 1'-0"

SPECIAL NOTES TO FABRICATOR:

1. AN ALTERNATE STRAND PATTERN BETTER SUITED TO THE FABRICATOR'S FACILITIES THAT HAS THE SAME ECCENTRICITY AS THE PATTERN SHOWN ON THIS PLAN WILL BE CONSIDERED FOR APPROVAL UPON SUBMISSION BY THE MANUFACTURER OF COMPUTATIONS WITH THE DETAIL DRAWINGS.
2. L1 BARS MAY BE ADDED IN THE BEAM WALLS TO FACILITATE NON-PRESTRESSED REINFORCEMENT PLACEMENT, ONLY IF 1½" MINIMUM CLEARANCE CAN BE MAINTAINED BETWEEN THE L1 BARS AND THE PRESTRESSING STRANDS.
3. TACK WELDING OF REINFORCEMENT IS PROHIBITED.
4. IF REINFORCING BAR SUPPORTS ARE USED, THEY SHALL BE CLASS 1, PLASTIC PROTECTED, IN ACCORDANCE WITH CHAPTER 3 OF THE CURRENT CRSI MANUAL OF STANDARD PRACTICE.
5. MANUFACTURER SHALL BURN BACK PRESTRESSING STRANDS TO A DEPTH OF ONE INCH BELOW SURFACE OF CONCRETE ON ENDS OF BEAM. RESULTING RECESSES SHALL BE FILLED WITH EPOXY GROUT.

"BL"	"S"
27'-10"	4'-5⅝" (•)
32'-10"	4'-6⅝" (-)
34'-10"	4'-10"

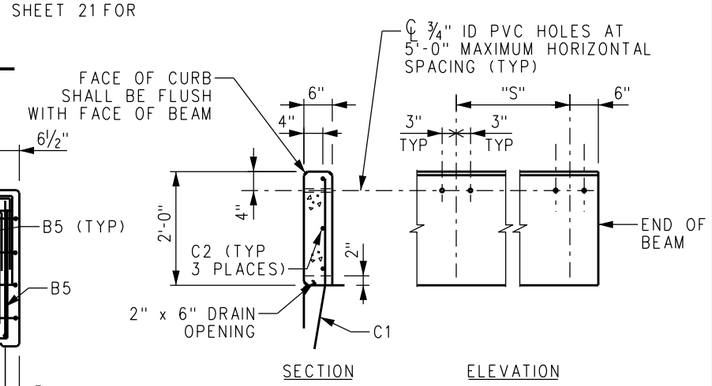

CURB DETAIL

SCALE: ¾" = 1'-0"

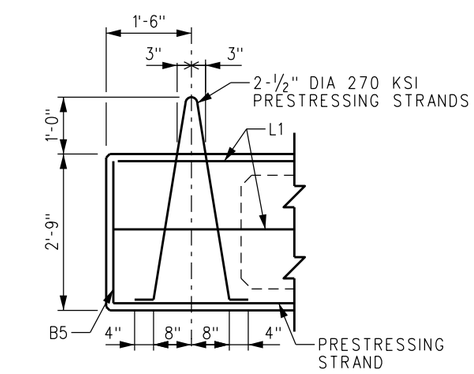

SECTION E

SCALE: ¾" = 1'-0"

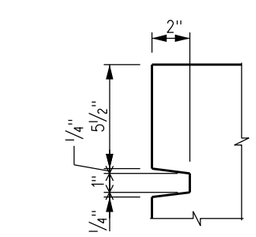

SECTION F

SCALE: 3" = 1'-0"

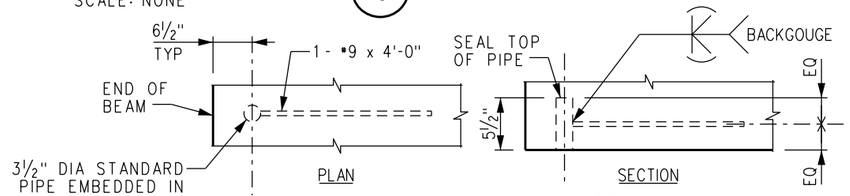

DETAIL 1

SCALE: 3" = 1'-0"

REV.	DATE	DESCRIPTION	DES.	ENG.
X	XX-XX-XX	REVISION	XX	XX

DRAWN BY: A. CARLOS DATE: 03/31/2011

ASSISTANT DIRECTOR: STANDARDS & DESIGN

DIRECTOR OF ENGINEERING AND CONSTRUCTION

METROLINK®
SOUTHERN CALIFORNIA REGIONAL RAIL AUTHORITY
ONE GATEWAY PLAZA, 12TH FLOOR, L. A., CA. 90012

ENGINEERING STANDARDS
33" PRECAST/PRESTRESSED CONCRETE DOUBLE BOX BEAMS (1 OF 3)
PRECAST/PRESTRESSED CONCRETE DOUBLE BOX BEAM BRIDGES

STANDARD 6001
SCALE: AS NOTED
REVISION –
SHEET 20 OF 26
CADD FILE: ES6001-20

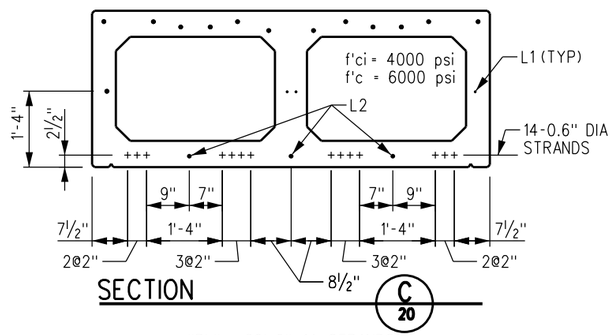

"BL" = 20'-0", 14 STRANDS

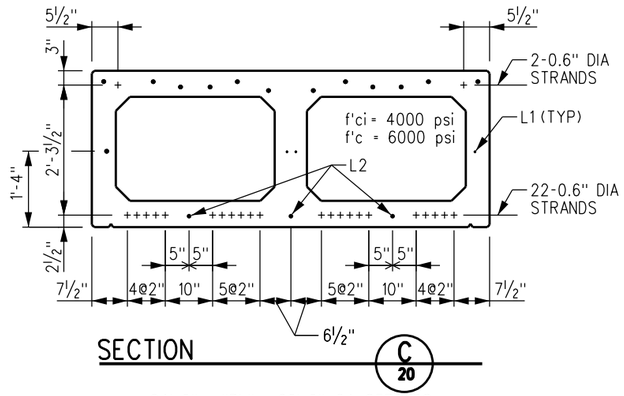

24'-0" < "BL" ≤ 26'-0", 24 STRANDS

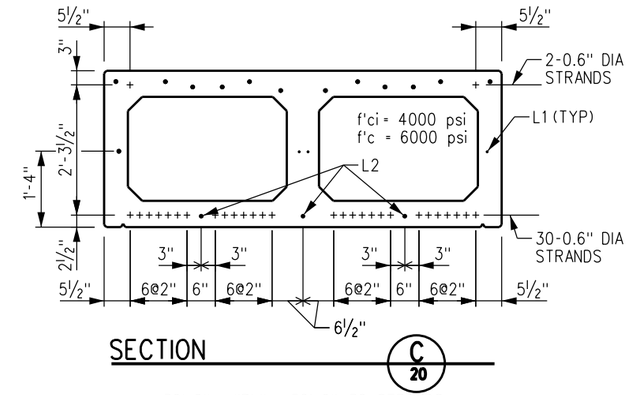

30'-0" < "BL" ≤ 32'-0", 32 STRANDS

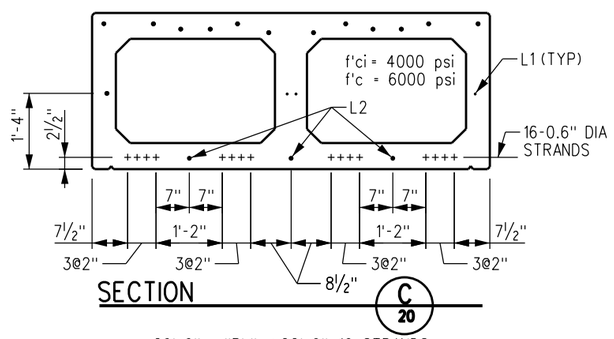

20'-0" < "BL" ≤ 22'-0", 16 STRANDS

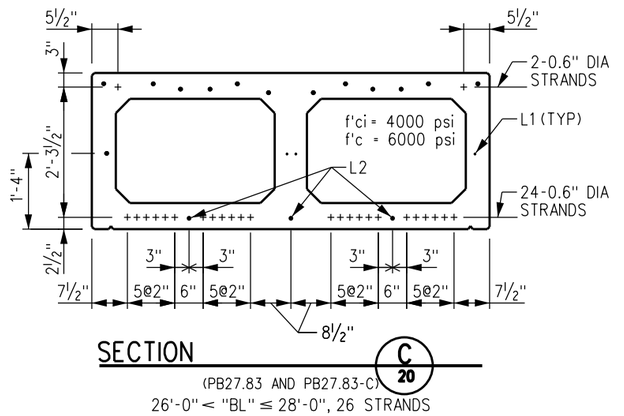

(PB27.83 AND PB27.83-C)

26'-0" < "BL" ≤ 28'-0", 26 STRANDS

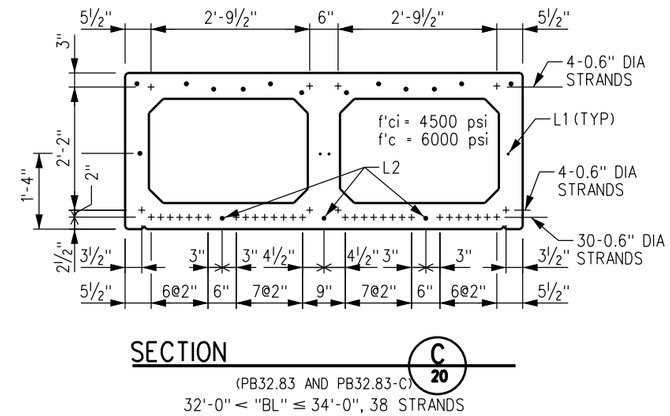

(PB32.83 AND PB32.83-C)

32'-0" < "BL" ≤ 34'-0", 38 STRANDS

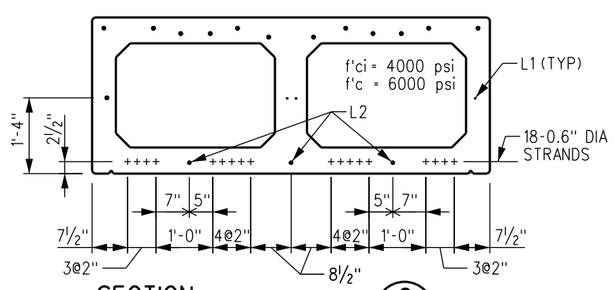

22'-0" < "BL" ≤ 24'-0", 18 STRANDS

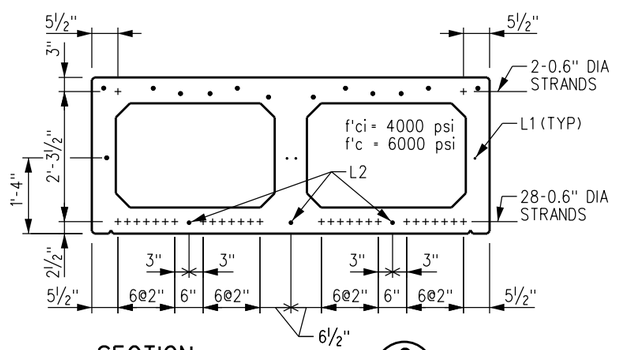

28'-0" < "BL" ≤ 30'-0", 30 STRANDS

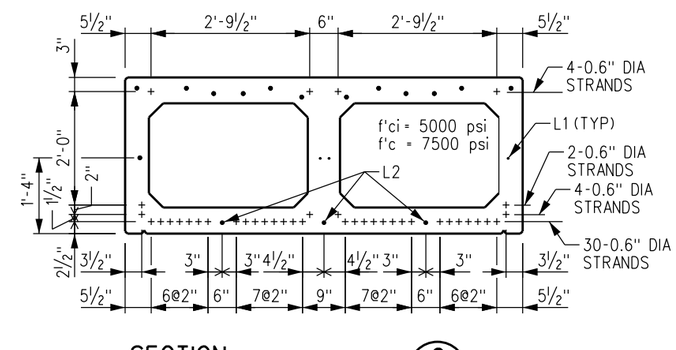

(PB34.83 AND PB34.83-C)

34'-0" < "BL" ≤ 35'-0", 40 STRANDS

REV.	DATE	DESCRIPTION	DES.	ENG.
X	XX-XX-XX	REVISION	XX	XX

DRAWN BY: A. CARLOS DATE: 03/31/2011

ASSISTANT DIRECTOR: STANDARDS & DESIGN

DIRECTOR OF ENGINEERING AND CONSTRUCTION

METROLINK®

SOUTHERN CALIFORNIA REGIONAL RAIL AUTHORITY
ONE GATEWAY PLAZA, 12TH FLOOR, L. A., CA. 90012

ENGINEERING STANDARDS

33" PRECAST/PRESTRESSED CONCRETE DOUBLE BOX BEAMS (2 OF 3)
PRECAST/PRESTRESSED CONCRETE DOUBLE BOX BEAM BRIDGES

STANDARD 6001
SCALE: ¾" = 1'-0"
REVISION –
SHEET 21 OF 26
CADD FILE: ES6001-21

BAR SCHEDULE	
MARK	DESCRIPTION
B1	#5 x 11'-5"
B2	#5 x 7'-4"
B3	#6 x 11'-5"
B4	#4 x 10'-2"
B5	#6 x 4'-8"
C1	#5 x 3'-9"
C2 (STRAIGHT)	#4 x "G"
L1 (STRAIGHT)	#4 x "F"
L2 (STRAIGHT)	#7 x "H"
T1 (STRAIGHT)	#4 x 6'-9"
T2	#5 x 9'-10"
T3	#4 x 9'-2"
T4 (STRAIGHT)	#6 x 6'-9"
T5	#6 x 10'-4"
T6	#4 x 9'-0"

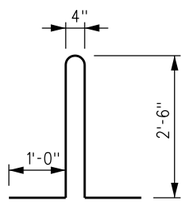

B2

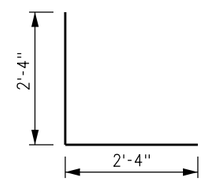

B5

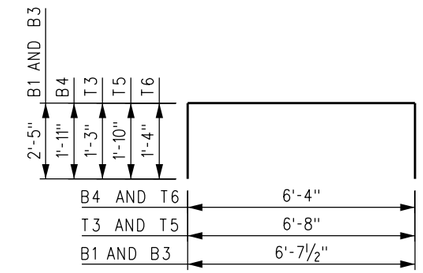

B1, B3, B4, T3, T5 & T6

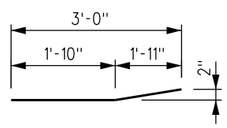

C1
EPOXY-COATED

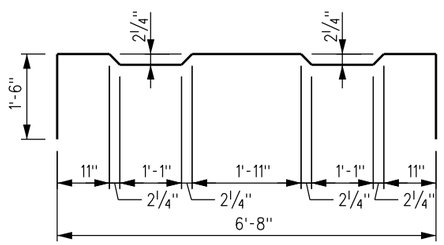

T2

QUANTITIES FOR STANDARD BEAMS		
BEAM MARK	REQUIRED VOLUME OF CONCRETE	WEIGHT OF MILD STEEL REINFORCING
PB34.83-C	14.9 CY	3356 LBS
PB34.83	13.6 CY	3106 LBS
PB32.83-C	14.1 CY	3195 LBS
PB32.83	12.9 CY	2961 LBS
PB27.83-C	12.2 CY	2810 LBS
PB27.83	11.2 CY	2614 LBS

NOTES:

1. ALL BAR DIMENSIONS ARE OUT TO OUT OF BARS. BEND #4 BARS AROUND 3" DIA PIN, #5 BARS AROUND 3¾" DIA PIN (EXCEPT BAR B2 WHICH SHALL BE BENT AROUND 2¾" DIA PIN) AND #6 BARS AROUND 4½" DIA PIN.
2. "F" = "BL" - 5"
   "G" = ("BL" - 20")/4
   "H" = "BL" - 18"

REV.	DATE	DESCRIPTION	DES.	ENG.
X	XX-XX-XX	REVISION	XX	XX

DRAWN BY: A. CARLOS DATE: 03/31/2011

ASSISTANT DIRECTOR: STANDARDS & DESIGN

DIRECTOR OF ENGINEERING AND CONSTRUCTION

METROLINK®
SOUTHERN CALIFORNIA REGIONAL RAIL AUTHORITY
ONE GATEWAY PLAZA, 12TH FLOOR, L. A., CA. 90012

ENGINEERING STANDARDS

33" PRECAST/PRESTRESSED CONCRETE DOUBLE BOX BEAMS (3 OF 3)
PRECAST/PRESTRESSED CONCRETE DOUBLE BOX BEAM BRIDGES

STANDARD 6001
SCALE: ¾" = 1'-0"
REVISION –
SHEET 22 OF 26
CADD FILE: ES6001-22

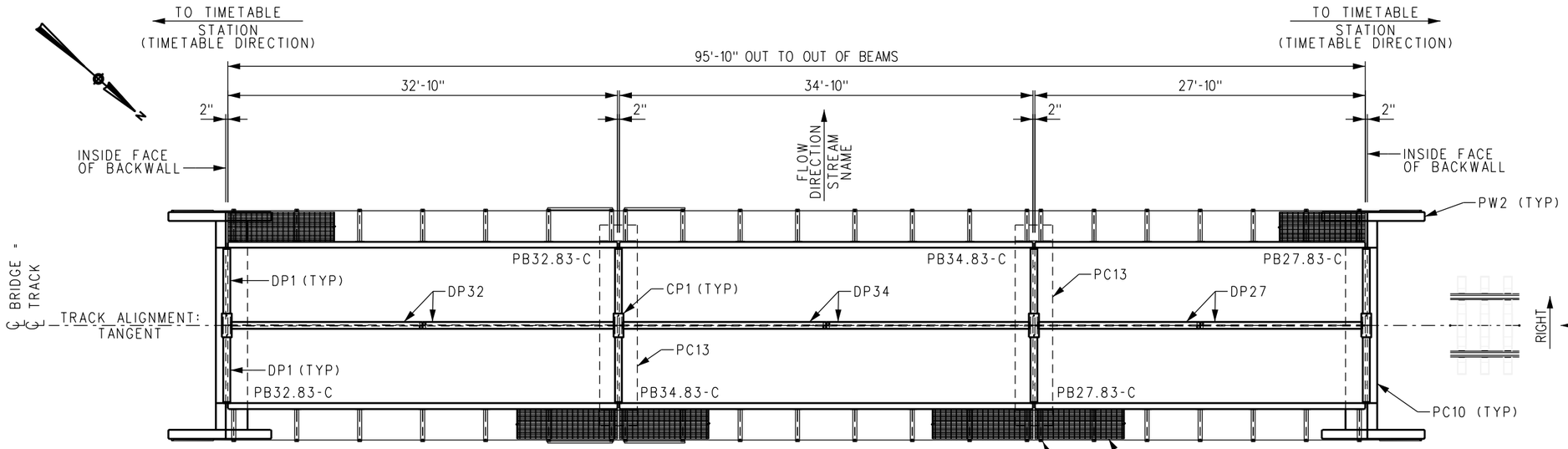

BEAM ARRANGEMENT TYPE - I

PLAN

SCALE: 3/16" = 1'-0"

TABLE OF ELEVATIONS

BENT #	T/R EL	B/R EL	T/SEAT	PILE CUTOFF
1	100.61	100.00	95.42	93.08
2	100.67	100.06	95.48	93.14
3	100.74	100.13	95.55	93.21
4	100.80	100.19	95.61	93.27

ESTIMATED LIFTING WEIGHTS

PB34.83-C	26.9 TONS
PB32.83-C	25.3 TONS
PB27.83-C	21.5 TONS
PC10	12.3 TONS
PC13	10.5 TONS
PW2	2.7 TONS

DRAWING LIST

THIS SET	1	SAMPLE GENERAL ARRANGEMENT
	2	SAMPLE END BENT SECTION AND PILE LAYOUT
	3	SAMPLE BENT SECTIONS
	4	SAMPLE BILL OF MATERIAL
REF	ES6001 - PRECAST/PRESTRESSED CONCRETE DOUBLE BOX BEAM BRIDGES	

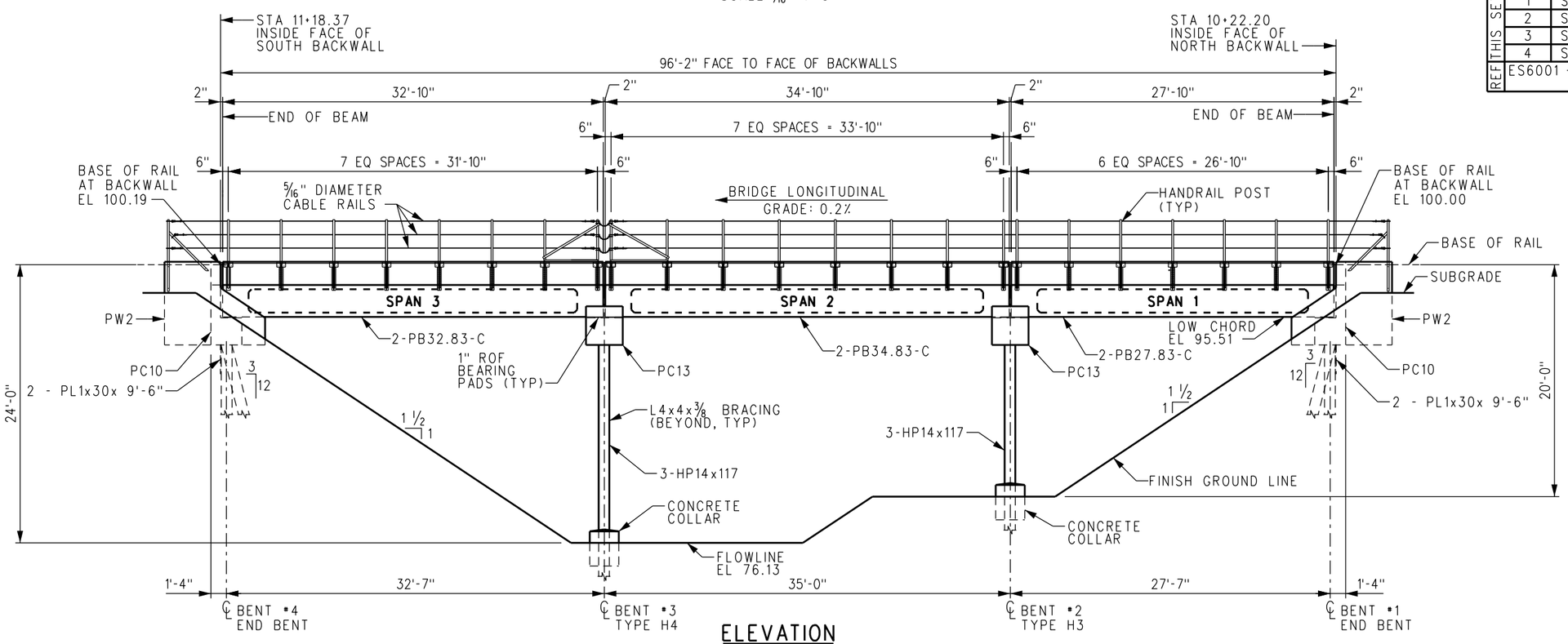

ELEVATION

SCALE: 3/16" = 1'-0"

X	XX-XX-XX	REVISION	XX	XX
REV.	DATE	DESCRIPTION	DES.	ENG.

DRAWN BY: HDR DATE: 03/31/2011

ASSISTANT DIRECTOR: STANDARDS & DESIGN

DIRECTOR OF ENGINEERING AND CONSTRUCTION

METROLINK®

SOUTHERN CALIFORNIA REGIONAL RAIL AUTHORITY
ONE GATEWAY PLAZA, 12TH FLOOR, L. A., CA. 90012

ENGINEERING STANDARDS

SAMPLE GENERAL ARRANGEMENT
PRECAST/PRESTRESSED CONCRETE
DOUBLE BOX BEAM BRIDGES

STANDARD 6001
SCALE: AS NOTED
REVISION –
SHEET 23 OF 26
CADD FILE: ES6001-23

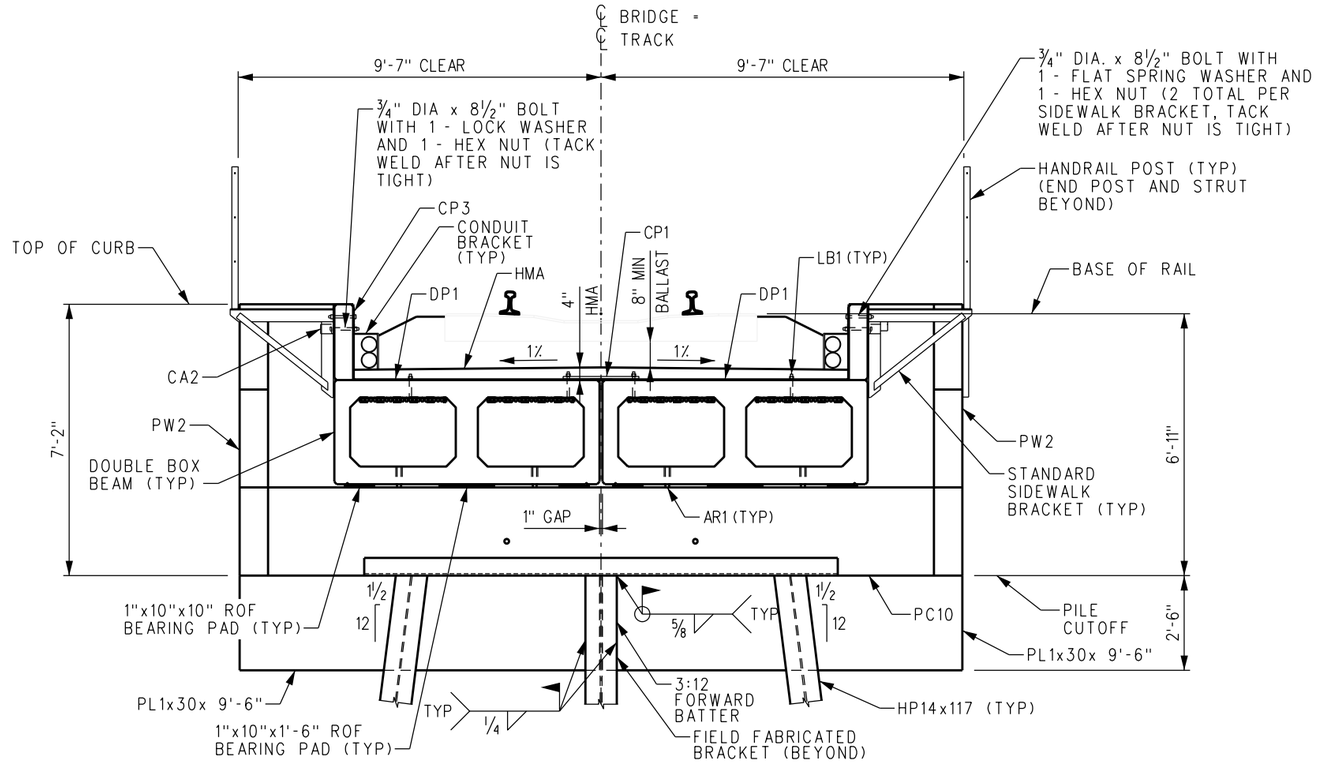

END BENT SECTION

SCALE: ½" = 1'-0"

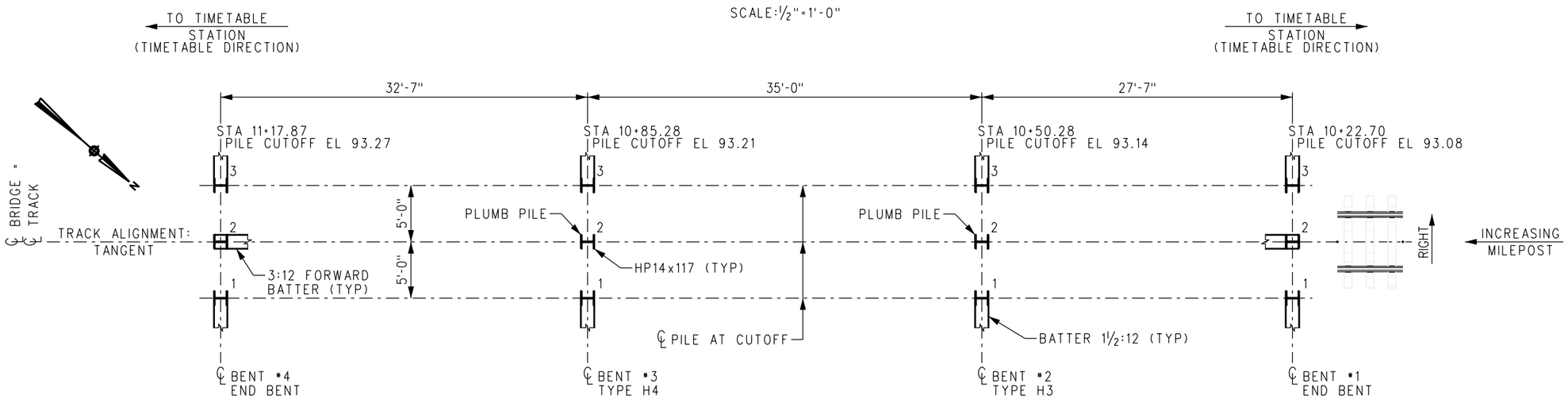

PILE LAYOUT

SCALE: 3/16" = 1'-0"

REV.	DATE	DESCRIPTION	DES.	ENG.
X	XX-XX-XX	REVISION	XX	XX

DRAWN BY: HDR DATE: 03/31/2011

ASSISTANT DIRECTOR: STANDARDS & DESIGN

DIRECTOR OF ENGINEERING AND CONSTRUCTION

METROLINK®
SOUTHERN CALIFORNIA REGIONAL RAIL AUTHORITY
ONE GATEWAY PLAZA, 12TH FLOOR, L. A., CA. 90012

ENGINEERING STANDARDS

SAMPLE END BENT SECTION AND PILE LAYOUT
PRECAST/PRESTRESSED CONCRETE
DOUBLE BOX BEAM BRIDGES

STANDARD 6001
SCALE: AS NOTED
REVISION –
SHEET 24 OF 26
CADD FILE: ES6001-24

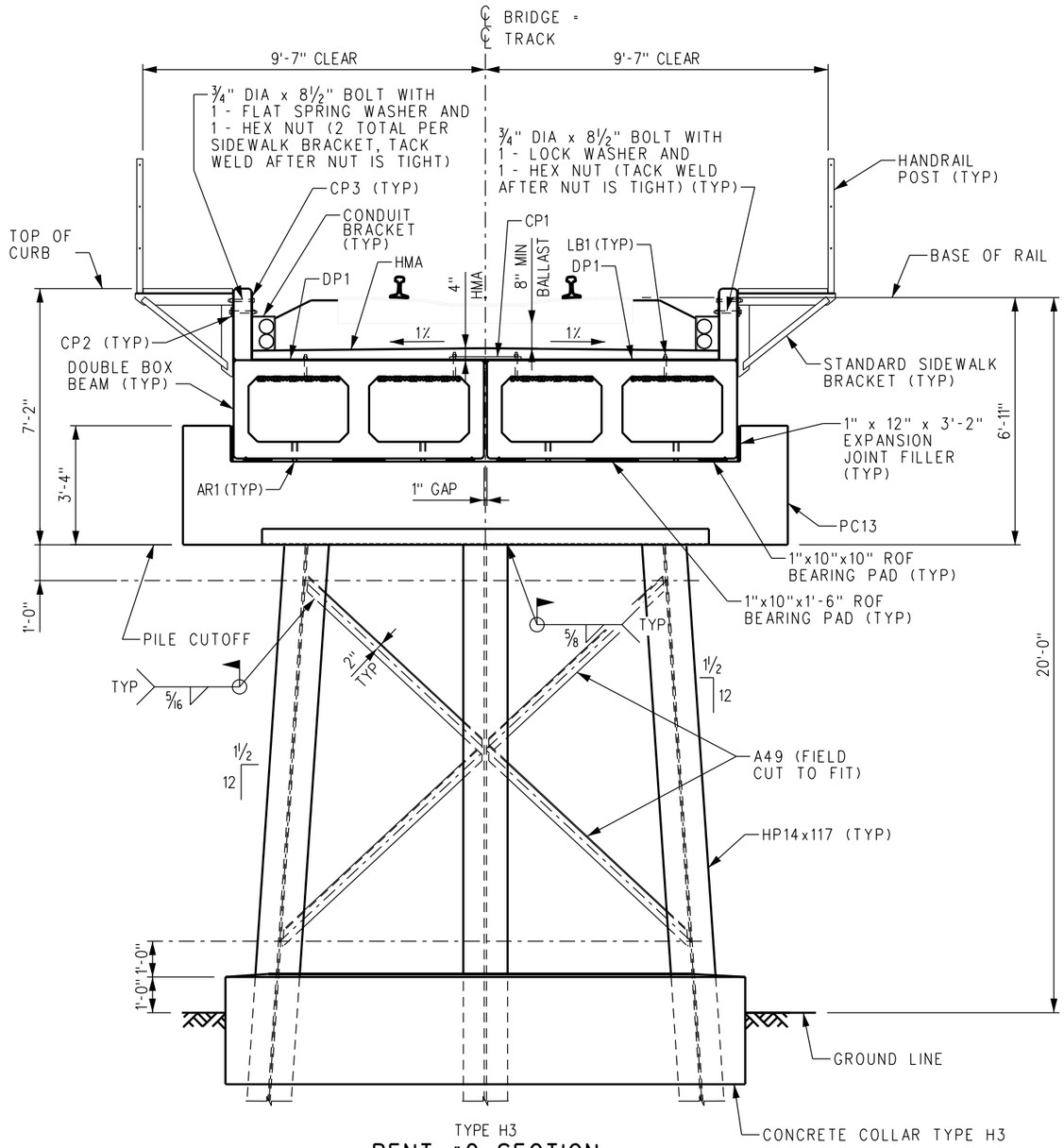

TYPE H3

BENT #2 SECTION

SCALE: ½" = 1'-0"

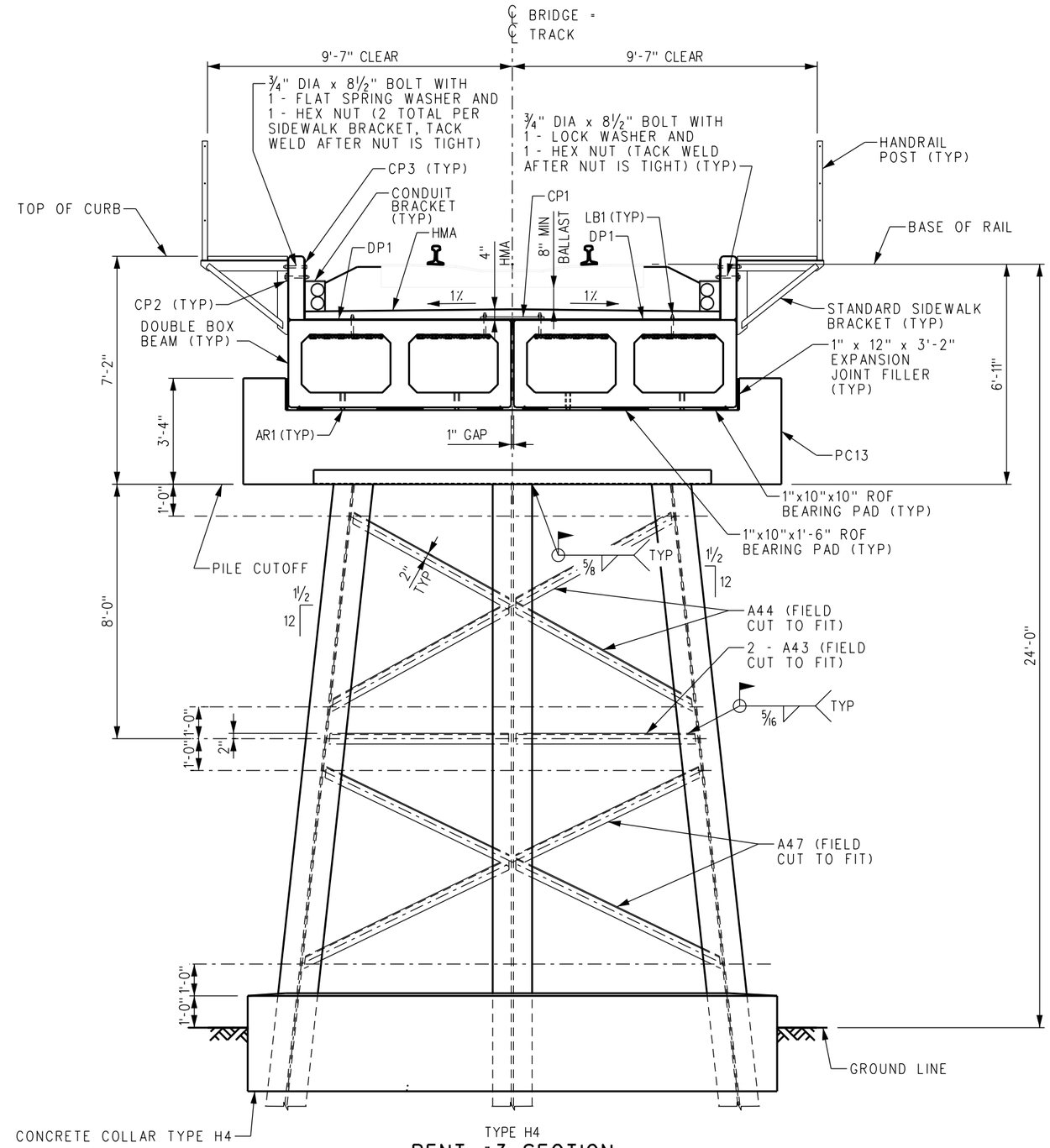

TYPE H4

BENT #3 SECTION

SCALE: ½" = 1'-0"

REV.	DATE	DESCRIPTION	DES.	ENG.
X	XX-XX-XX	REVISION	XX	XX

DRAWN BY: HDR DATE: 03/31/2011

ASSISTANT DIRECTOR: STANDARDS & DESIGN

DIRECTOR OF ENGINEERING AND CONSTRUCTION

METROLINK

SOUTHERN CALIFORNIA REGIONAL RAIL AUTHORITY
ONE GATEWAY PLAZA, 12TH FLOOR, L. A., CA. 90012

ENGINEERING STANDARDS

SAMPLE BENT SECTIONS
PRECAST/PRESTRESSED CONCRETE
DOUBLE BOX BEAM BRIDGES

STANDARD 6001
SCALE: AS NOTED
REVISION –
SHEET 25 OF 26
CADD FILE: ES6001-25

LIST OF STANDARD BRIDGE MATERIALS

DESCRIPTION	DESCRIPTION
PILES	PRECAST/PRESTRESSED CONCRETE BEAMS
HP14x117 STEEL BEARING PILE	PB27.83-C (33" DEEP, 26 STRANDS, WITH CURB)
HP14x117 PILE SPLICER	PB27.83 (33" DEEP, 26 STRANDS)
TIP REINFORCEMENT HARD-BITE POINT MODEL HP-77600-B	PB32.83-C (33" DEEP, 38 STRANDS, WITH CURB)
MISCELLANEOUS STEEL	PB32.83 (33" DEEP, 38 STRANDS)
DECK PLATE CP1 (SEE DETAIL, SHEET 17)	PB34.83-C (33" DEEP, 40 STRANDS, WITH CURB)
DECK PLATE DP1 (SEE DETAIL, SHEET 17)	PB34.83 (33" DEEP, 40 STRANDS)
DECK PLATE DP3 (SEE DETAIL, SHEET 17)	CAST-IN-PLACE CONCRETE COLLARS
DECK PLATE DP27 (SEE DETAIL, SHEET 17)	4000 PSI CONCRETE
DECK PLATE DP32 (SEE DETAIL, SHEET 17)	REINFORCING STEEL
DECK PLATE DP34 (SEE DETAIL, SHEET 17)	MISCELLANEOUS MATERIAL
CURB PLATE CP2 (SEE DETAIL, SHEET 17)	STEEL GRATING 19W4 SERR CS (SEE DETAIL, SHEET 18)
CURB PLATE CP3 (SEE DETAIL, SHEET 17)	5/16" DIAMETER AIRCRAFT CABLE (SEE DETAIL, SHEET 5)
CURB ANGLE CA2 (SEE DETAIL, SHEET 17)	4" DIA GALVANIZED STD STEEL PIPE (SEE DETAIL, SHEET 5)
BOLT LB1 (SEE DETAIL, SHEET 17)	3 1/2" HVU ADHESIVE CAPSULE
WASHER W1 (SEE DETAIL, SHEET 17)	1" x 10" x 0'-10" ROF BEARING PAD (SEE DETAIL, SHEET 6)
CONDUIT BRACKET (SEE DETAIL, SHEET 18)	1" x 10" x 1'-6" ROF BEARING PAD (SEE DETAIL, SHEET 6)
STANDARD SIDEWALK BRACKET (SEE DETAIL, SHEET 18)	1" x 12" x 3'-2" EXPANSION JOINT FILLER (SEE DETAIL, SHEET 6)
BACKWALL PLATE, PL1x30x 7'-0" (PLAIN) (SEE DETAIL, SHEET 9)	1" x 12" x 5'-0" EXPANSION JOINT FILLER (SEE DETAIL, SHEET 6)
BACKWALL PLATE, PL1x30x 9'-6" (PLAIN) (SEE DETAIL, SHEET 7 & 9)	1/2" x 30" x 3'-1" EXPANSION JOINT FILLER (SEE DETAIL, SHEETS 9, 10, 12)
UNISTRUT 2x2x5/16 NO 20-F-12 (SEE DETAIL, SHEET 5)	HMA PAVEMENT
BRACING	HMA TRACK UNDERLAY
ANGLE A38, 4x4x3/8x 5'-0 (PLAIN)	CHEMICAL MASTIC CM-15 METALLIC ALUMINUM COLOR PAINT
ANGLE A42, 4x4x3/8x 12'-0 (PLAIN)	ADHESIVE FOR BEARING PADS
ANGLE A43, 4x4x3/8x 13'-0 (PLAIN)	GROUT
ANGLE A44, 4x4x3/8x 14'-0 (PLAIN)	EPOXY GROUT
ANGLE A45, 4x4x3/8x 15'-0 (PLAIN)	PETROLATUM (SEE DETAIL, SHEET 13)
ANGLE A46, 4x4x3/8x 16'-0 (PLAIN)	FREE-DRAINING GRANULAR FILL (SEE DETAIL, SHEET 13)
ANGLE A47, 4x4x3/8x 17'-0 (PLAIN)	HARDWARE
ANGLE A48, 4x4x3/8x 18'-0 (PLAIN)	3/4" DIA x 8 1/2" BOLT WITH 1 - FLAT SPRING WASHER AND 1 - HEX NUT (SEE DETAIL, SHEET 5)
ANGLE A49, 4x4x3/8x 19'-0 (PLAIN)	3/4" DIA x 8 1/2" BOLT WITH 1 - LOCK WASHER AND 1 - HEX NUT (SEE DETAIL, SHEET 5)
ANGLE A50, 4x4x3/8x 20'-0 (PLAIN)	3/8" DIA x 6 1/2" THREADED ROD (SEE DETAIL. SHEET 5)
ANGLE A51, 4x4x3/8x 21'-0 (PLAIN)	3/8" DIA x 5" THREADED ROD (CONDUIT BRACKET ANCHORS)
PRECAST CONCRETE MEMBERS	SADDLE CLIP (SEE DETAIL, SHEET 5)
PRECAST CAP PC10 (SEE DETAILS, SHEET 14)	1/4" DIA x 2 1/2" HEX BOLT WITH 1 - SPRING WASHER AND 1 - HEX NUT (SEE DETAIL, SHEET 5)
PRECAST CAP PC11(R) (SEE DETAILS, SHEET 14)	3/8 DIA EYEBOLT, 3" LONG SHANK WITH 1" ID EYE, PLAIN PATTERN, DROP FORGED STEEL WITH 1 - FLAT WASHER AND 1 - HEX NUT (SEE DETAIL, SHEET 5)
PRECAST CAP PC11(L) (SEE DETAILS, SHEET 14)	MALLEABLE WIRE ROPE CLIP (GALV) WITH 2 ELASTIC LOCKNUTS (GALV) FOR 5/16" DIA CABLE(SEE DETAIL, SHEET 5)
PRECAST CAP PC12(R) (SEE DETAILS, SHEET 14)	3/8" SAFETY CHAIN (SEE DETAIL, SHEET 5)
PRECAST CAP PC12(L) (SEE DETAILS, SHEET 14)	3/8" QUICK LINK FOR 3/8" SAFETY CHAIN (SEE DETAIL, SHEET 5)
PRECAST CAP PC13 (SEE DETAILS, SHEET 15)	
PRECAST CAP PC13B (SEE DETAILS, SHEET 15)	
PRECAST CAP PC14 (SEE DETAILS, SHEET 16)	
PRECAST CAP PC14B (SEE DETAILS, SHEET 16)	
PRECAST WING WALL PW2 (SEE DETAILS, SHEET 15)	

NOTE:
ROF = RANDOM ORIENTED FIBER

BILL OF MATERIAL

REQ'D	UNIT	DESCRIPTION
2	EA	PB34.83-C
2	EA	PB32.83-C
2	EA	PB27.83-C
24	EA	1"x10"x10" ROF BEARING PAD
12	EA	1"x10"x1'-6" ROF BEARING PAD
2	EA	PC10
4	EA	PW2
2	EA	PC13
4.5	CY	CONCRETE FOR COLLAR H3
4.8	CY	CONCRETE FOR COLLAR H4
1	LOT	REINFORCING STEEL FOR COLLAR H3
1	LOT	REINFORCING STEEL FOR COLLAR H4
12	EA	HP14x117 x 60'
12	EA	TIP REINFORCEMENT HARD BITE POINT MODEL HP-77600-B
16	EA	W1
2	EA	A49
2	EA	A44
2	EA	A43
2	EA	A47
2	EA	DP34
2	EA	DP32
2	EA	DP27
8	EA	DP1
4	EA	CP1
4	EA	CA2
4	EA	CP2
46	EA	CP3
89	LF	2"x2" UNISTRUT NO 20-F-12
16	EA	HANDRAIL END POST ANCHOR 3/8" DIA x 6 1/2" THREADED ROD
46	EA	SIDEWALK BRACKET
92	EA	SIDEWALK BRACKET BOLTS 3/4" DIA x 8 1/2"
4	EA	PL1x30x 9'-6"
8	EA	CURB PLATE BOLTS 3/4" DIA x 8 1/2"
10	EA	GRATING 19W4 (1 1/2" x 1/8") SERR CS 2'-6" x 20'-0" SPAN SERRATED TRIMMED, GALVANIZED
104	EA	TYPE F-9 SADDLE CLIP
104	EA	GRATING BOLTS 1/4" DIA x 2 1/2"
696	LF	5/16" DIAMETER AIRCRAFT CABLE (6-73' & 6-43' LENGTHS)
24	EA	3/8" DIA EYEBOLT WITH NUT AND WASHER
48	EA	MALLEABLE WIRE ROPE CLIP FOR 5/16" DIA CABLE
5	LF	3/8" SAFETY CHAIN
6	EA	3/8" QUICK LINK FOR 3/8" SAFETY CHAIN
16	EA	LB1
34	EA	CONDUIT BRACKET
34	EA	CONDUIT BRACKET ANCHOR 3/8" DIA x 5" THREADED ROD
34	EA	3 1/2" HILTI HVU ADHESIVE CAPSULE FOR 3/8" DIA HILTI HAS ROD OR EQUAL
392	LF	4" DIA GALVANIZED STD STEEL PIPE
4	EA	1" x 12" x 3'-2" EXPANSION JOINT FILLER
1	LOT	HMA PAVEMENT
1	LOT	HMA TRACK UNDERLAY
1	LOT	PAINT, CHEMICAL-MASTIC CM-15, METALLIC ALUMINUM COLOR
1	LOT	ADHESIVE FOR BEARING PADS
7.8	CY	FREE-DRAINING GRANULAR FILL
1	LOT	PETROLATUM
1	LOT	GROUT
1	LOT	EPOXY GROUT

ESTIMATED WEIGHT OF STEEL PILING: 84,240 LBS
ESTIMATED WEIGHT OF STEEL BRACING: 1,235 LBS
ESTIMATED WEIGHT OF STEEL BAR GRATING: 3,675 LBS
ESTIMATED WEIGHT OF MISCELLANEOUS STEEL: 9,315 LBS
(EXCLUDING BOLTS, NUTS AND WASHERS)
ESTIMATED WEIGHT OF REINFORCING STEEL: 540 LBS

REV.	DATE	DESCRIPTION	DES.	ENG.
X	XX-XX-XX	REVISION	XX	XX

DRAWN BY: HDR DATE: 03/31/2011

ASSISTANT DIRECTOR: STANDARDS & DESIGN

DIRECTOR OF ENGINEERING AND CONSTRUCTION

METROLINK®
SOUTHERN CALIFORNIA REGIONAL RAIL AUTHORITY
ONE GATEWAY PLAZA, 12TH FLOOR, L. A., CA. 90012

ENGINEERING STANDARDS

SAMPLE BILL OF MATERIAL
PRECAST/PRESTRESSED CONCRETE
DOUBLE BOX BEAM BRIDGES

STANDARD 6001
SCALE: NTS
REVISION –
SHEET 26 OF 26
CADD FILE: ES6001-26

METROLINK®

ENGINEERING STANDARDS FOR PRECAST/PRESTRESSED CONCRETE SLAB BEAM BRIDGES

12", 14", 16", 18" AND 20" SLAB BEAMS ON PRECAST CONCRETE CAPS WITH DRIVEN STEEL H-PILE FOUNDATIONS

DRAWING INDEX

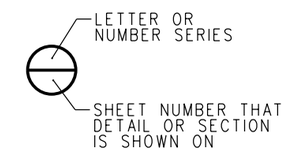

SHEET SHOWING SECTION OR DETAIL CUT

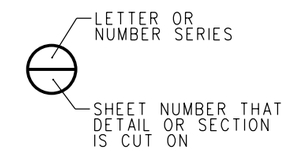

SHEET SHOWING SECTION OR DETAIL

SECTION OR DETAIL DESIGNATION

NOTE:

1. "_" INDICATES SECTION OR DETAIL IS CUT AND SHOWN ON THE SAME SHEET.

REV.	DATE	DESCRIPTION	DES.	ENG.
X	XX-XX-XX	REVISION	XX	XX

DRAWN BY: HDR DATE: 03/31/2011

ASSISTANT DIRECTOR: STANDARDS & DESIGN

DIRECTOR OF ENGINEERING AND CONSTRUCTION

METROLINK®
SOUTHERN CALIFORNIA REGIONAL RAIL AUTHORITY
ONE GATEWAY PLAZA, 12TH FLOOR, L. A., CA. 90012

ENGINEERING STANDARDS

TITLE SHEET
PRECAST/PRESTRESSED CONCRETE
SLAB BEAM BRIDGES

STANDARD 6002
SCALE: NTS
REVISION –
SHEET 1 OF 22
CADD FILE: ES6002-01

DESIGN NOTES:

1. PRECAST/PRESTRESSED CONCRETE SLAB BEAM AND PRECAST CONCRETE CAP DESIGNS HAVE BEEN PERFORMED IN ACCORDANCE WITH THE 2009 AMERICAN RAILWAY ENGINEERING AND MAINTENANCE-OF-WAY ASSOCIATION (AREMA) MANUAL FOR RAILWAY ENGINEERING, CHAPTER 8: CONCRETE STRUCTURES AND FOUNDATIONS, PART 2: REINFORCED CONCRETE DESIGN AND PART 17: PRESTRESSED CONCRETE.

2. BEARING DESIGN HAS BEEN PERFORMED FOR RAILROAD LOADING AND THERMAL EFFECTS IN ACCORDANCE WITH THE 2009 AREMA MANUAL FOR RAILWAY ENGINEERING, CHAPTER 15: STEEL STRUCTURES, PART 10: BEARING DESIGN, EXCEPT AS MODIFIED BELOW FOR RANDOM ORIENTED FIBER (ROF) REINFORCED ELASTOMERIC BEARING PADS. SITE SPECIFIC DESIGN VERIFICATION IS REQUIRED FOR SEISMIC EFFECTS.
   - A. DESIGN OF ROF BEARING PADS AS PLAIN (UNREINFORCED), RECTANGULAR ELASTOMERIC BEARING PADS PER AREMA WITH MODIFICATIONS AS LISTED IN B THROUGH E.
   - B. MODIFYING FACTOR, K=1.0
   - C. ALLOWABLE COMPRESSIVE STRESS, $f_a \leq 1000+100(S) \leq 1500$ psi
   - D. ALLOWABLE COMPRESSIVE DEFLECTION, $\delta_c \leq 0.15(T) \leq 0.2"$
   - E. ALLOWABLE ROTATION, $L(\alpha_L) + W(\alpha_W) \leq 0.30(T) \leq 0.4"$ WHERE "T" IS THE THICKNESS OF THE BEARING PAD.

3. HANDRAIL, STEEL GRATING WALKWAY AND ASSOCIATED SUPPORTS AND CONNECTIONS HAVE BEEN DESIGNED IN ACCORDANCE WITH THE 2009 AREMA MANUAL FOR RAILWAY ENGINEERING, CHAPTER 15: STEEL STRUCTURES, PART 1: DESIGN AND PART 8: MISCELLANEOUS.

4. PRECAST CONCRETE SUBSTRUCTURE COMPONENTS, CAST-IN-PLACE CONCRETE COLLARS, STEEL PILING AND BRACING, CONNECTIONS BETWEEN STEEL PILING AND CAPS AND CONNECTIONS BETWEEN SLAB BEAMS AND CAPS ARE PREFERRED DETAILS FOR SUBSTRUCTURES SUPPORTING STANDARD SLAB BEAM SUPERSTRUCTURES. DESIGN SHALL BE VERIFIED FOR RAILROAD LOADING AND SITE-SPECIFIC SEISMIC EFFECTS PER THE SCRRA DESIGN CRITERIA MANUAL AT EACH LOCATION PROPOSED FOR USE.

5. DESIGN OF STANDARD SLAB BEAMS IS VALID FOR TIMBER TIES OR CONCRETE TIES WITH A MINIMUM LENGTH OF 8'-3" AND THE FOLLOWING DEPTHS OF MATERIAL FROM TOP OF BEAM TO BOTTOM OF TIE:
   - A. 12" MINIMUM DEPTH BELOW TIE
   - B. 16" MAXIMUM DEPTH BELOW TIE

   DEPTH BELOW THE TIE INCLUDES THE THICKNESS OF BALLAST AND HOT MIXED ASPHALT (HMA) PAVING, IF APPLICABLE (FOR EXAMPLE, 4" HMA AND 8" BALLAST WOULD MAKE UP 12" DEPTH BELOW THE TIE). THE THICKNESS OF BALLAST TO BE INCLUDED IN THE DEPTH BELOW THE TIE SHALL NOT BE LESS THAN 8".

6. DESIGN OF STANDARD SLAB BEAMS IS VALID FOR 6" MAXIMUM OFFSET OF CENTERLINE TRACK TO CENTERLINE OF LONGITUDINAL GAP BETWEEN ADJACENT BEAMS. THE 6" MAXIMUM OFFSET IS APPLICABLE FOR BOTH TANGENT AND CURVED TRACKS.

7. FOR CURVED TRACK, DESIGN OF STANDARD SLAB BEAMS IS VALID FOR THE RANGE OF TRAIN SPEED AND DEGREE OF CURVE SHOWN IN THE TABLE TITLED "MAXIMUM ALLOWABLE DEGREE OF CURVE FOR DESIGN SPEED", THIS SHEET.

8. PRECAST/PRESTRESSED CONCRETE SLAB BEAM DESIGN LOADING (VALUES GIVEN FOR A SINGLE BEAM):
   - A. DEAD LOAD, D:
     - I. SELF-WEIGHT OF SLAB BEAMS, Dsw
       - 12" SLAB, Dsw12 = 1,050 LB/FT
       - 14" SLAB, Dsw14 = 1,225 LB/FT
       - 16" SLAB, Dsw16 = 1,400 LB/FT
       - 18" SLAB, Dsw18 = 1,575 LB/FT
       - 20" SLAB, Dsw20 = 1,750 LB/FT
     - II. BALLAST, HMA AND TIES, Db (TOP OF BEAM TO TOP OF TIE):
       - MINIMUM, 19" TOTAL DEPTH, Dbmin = 1,235 LB/FT
       - MAXIMUM, 24" TOTAL DEPTH, Dbmax = 1,560 LB/FT
     - III. TRACK (RAIL & OTM), Dt = 112 LB/FT
     - IV. CURB, WALKWAY AND HANDRAIL, Dc = 185 LB/FT
   - B. COOPER E-80 LIVE LOAD, L
   - C. IMPACT, I, BASED ON SPAN LENGTH CENTER-TO-CENTER OF BEARINGS, "SL", EXPRESSED IN % OF L:
     - I. FOR "SL" < 14', I = 60
     - II. FOR 14' < "SL" < 127', I = 225 / $\sqrt{("SL")}$
   - D. CENTRIFUGAL FORCE, CF, RESULTING IN A VERTICAL FORCE EQUAL TO 15% OF L.

9. CONTROLLING LOADING EFFECTS FOR EACH LIMIT STATE INVESTIGATED ARE PROVIDED IN THE TABLE TITLED "CONTROLLING DESIGN LOAD EFFECTS FOR PRECAST/PRESTRESSED CONCRETE SLAB BEAMS", SHEET 3.

10. STRAND PATTERN FOR SLAB BEAMS CONSISTS OF ½" DIA. SEVEN-WIRE HIGH-STRENGTH LOW-RELAXATION STRANDS AT 2" MINIMUM SPACING. FABRICATORS MAY BE ALLOWED TO SUBSTITUTE AN ALTERNATE STRAND SIZE, SPACING AND/OR PATTERN THAT PROVIDES THE SAME TOTAL AREA OF PRESTRESSING STEEL AND THE SAME ECCENTRICITY OF PRESTRESSING FORCE FROM THE CENTROID OF THE BEAM CROSS-SECTION. STRANDS WITH NOMINAL DIAMETER GREATER THAN ½" SHALL NOT BE USED IN SLAB BEAMS. SEE THE SPECIFICATIONS FOR ALTERNATE STRAND ARRANGEMENT SUBMITTAL REQUIREMENTS.

11. REQUIRED COMPRESSIVE STRENGTHS OF CONCRETE AT RELEASE, f'ci, AND AT 28 DAYS, f'c, ARE PROVIDED FOR EACH DESIGN. MINIMUM f'ci SHALL BE 4000 PSI AT RELEASE AND MINIMUM f'c SHALL BE 6000 PSI AT 28 DAYS.

12. PRECAST/PRESTRESSED CONCRETE SLAB BEAM DESIGNS ARE PROVIDED AT EVEN 2' INCREMENTS OF OUT-TO-OUT BEAM LENGTH, "BL", BETWEEN 12' AND 22'. SPAN LENGTH CENTER-TO-CENTER OF BEARINGS, "SL" IS 10" LESS THAN "BL" FOR SLAB BEAMS. FOR ACTUAL VALUES OF "BL" BETWEEN THOSE LENGTHS PROVIDED, USE THE DESIGN FOR THE NEXT LARGER "BL" (FOR EXAMPLE, THE STANDARD 19'-11" OUT-TO-OUT LENGTH OF 20" SLAB BEAM WOULD USE THE NUMBER OF STRANDS, STRAND PATTERN AND REQUIRED CONCRETE STRENGTHS FOR THE 20' DESIGN FOR THE 20" SLAB BEAM).

13. CALCULATIONS FOR DESIGN OF PRECAST/PRESTRESSED CONCRETE SLAB BEAMS AND PRECAST CONCRETE CAPS HAVE BEEN SIGNED AND SEALED BY A LICENSED PROFESSIONAL CIVIL ENGINEER IN THE STATE OF CALIFORNIA AND ARE KEPT ON FILE AT SCRRA HEADQUARTERS.

MAXIMUM ALLOWABLE DEGREE OF CURVE FOR DESIGN SPEED

MAX DESIGN SPEED (mph)	ALLOWABLE DEGREE OF CURVE
20	14° 00'
25	14° 00'
30	13° 53'
35	12° 00'
40	8° 57'
45	7° 04'
50	5° 43'
60	4° 04'
70	3° 00'
80	2° 10'
90	1° 40'
100	1° 21'
110	1° 05'

NOTE:
ALLOWABLE DEGREE OF CURVE SHOWN IN THE TABLE MAY NOT BE A PRACTICAL DESIGN VALUE. VALUES BASED SOLELY ON THE CENTRIFUGAL FORCE REQUIRED TO PRODUCE AN INCREASE OF 15% VERTICAL LIVE LOAD ON BEAMS.

REV.	DATE	DESCRIPTION	DES.	ENG.
X	XX-XX-XX	REVISION	XX	XX

DRAWN BY: HDR DATE: 03/31/2011

ASSISTANT DIRECTOR: STANDARDS & DESIGN

DIRECTOR OF ENGINEERING AND CONSTRUCTION

METROLINK®
SOUTHERN CALIFORNIA REGIONAL RAIL AUTHORITY
ONE GATEWAY PLAZA, 12TH FLOOR, L. A., CA. 90012

ENGINEERING STANDARDS

DESIGN NOTES
PRECAST/PRESTRESSED CONCRETE
SLAB BEAM BRIDGES

STANDARD 6002
SCALE: NTS
REVISION –
SHEET 2 OF 22
CADD FILE: ES6002-02

CONTROLLING DESIGN LOAD EFFECTS FOR PRECAST/PRESTRESSED CONCRETE SLAB BEAMS

				ESTIMATED PRESTRESSING									ALLOWABLE STRESSES									ULTIMATE CAPACITY			
				Design Bed Pretension	Elastic Shortening Loss	Total Long-term Prestress Loss	Initial Pretress	Final Prestress	Area of Prestressing Steel Provided	Initial Total Prestressing Force	Final Total Prestressing Force	Eccentricity of Total Prestressing Force from Centroid of Beam	Maximum Service Moments					Top Fiber Service Load Stresses		Bottom Fiber Service Load Stresses		Maximum Ultimate Moment Demand	Factored Moment Capacity	Maximum Ultimate Shear Demand	Factored Shear Capacity
													Dead	Live	Impact	Centrifugal	Total								
"D"	NOMINAL SPAN	"BL"	"SL"	f_{pBed} (ksi)	Δf_{ES} (ksi)	Δf_{Total} (ksi)	f_{pi} (ksi)	f_{pf} (ksi)	A_p (in^2)	P_i (k)	P_f (k)	e_p (in)	M_D (k-ft)	M_L (k-ft)	M_I (k-ft)	M_{CF} (k-ft)	M_{Total} (k-ft)	Allowable (psi)	Calculated (psi)	Allowable (psi)	Calculated (psi)	M_u (k-ft)	$\varnothing M_n$ (k-ft)	V_u (k)	$\varnothing V_n$ (k)
✱ 12"	12'-0"	11'-11"	11'-1"	200.0	13.6	49.9	186.4	150.1	8.26	1540	1240	2.2	44	146	88	22	300	4000C	1621 C	0T	884 C	639	1098	281	420
14"	12'-1"	12'-0"	11'-2"	200.0	11.9	43.4	188.1	156.6	6.73	1266	1054	3.1	48	149	89	22	308	2400C	1020 C	0T	808 C	655	1125	278	399
✱ 14"	14'-0"	13'-11"	13'-1"	200.0	12.8	47.6	187.3	152.5	8.26	1547	1260	3.0	66	213	128	32	439	3200C	1570 C	0T	624 C	930	1342	322	453
14"	16'-1"	16'-0"	15'-2"	200.0	13.3	49.9	186.7	150.1	9.18	1714	1378	2.9	88	282	163	42	575	3600C	2157 C	0T	256 C	1219	1473	355	475
16"	14'-1"	14'-0"	13'-2"	200.0	11.6	41.6	188.4	158.4	6.73	1268	1066	3.8	70	215	129	32	446	2400C	1116 C	0T	508 C	947	1391	319	467
✱ 16"	16'-0"	15'-11"	15'-1"	200.0	12.2	44.1	187.8	155.9	7.65	1437	1193	3.8	92	279	162	42	575	2400C	1502 C	0T	326 C	1215	1503	350	470
16"	18'-1"	18'-0"	17'-2"	200.0	12.4	45.3	187.6	154.7	8.26	1550	1278	3.8	119	348	189	52	708	2800C	1924 C	0T	41 C	1492	1632	388	488
18"	16'-1"	16'-0"	15'-2"	200.0	9.8	37.2	190.2	162.8	6.12	1164	996	4.6	98	282	163	42	585	2400C	1171 C	0T	178 C	1233	1538	352	514
✱ 18"	18'-0"	17'-11"	17'-1"	200.0	11.1	40.2	188.9	159.8	7.04	1330	1125	4.5	125	348	189	52	714	2400C	1448 C	0T	84 C	1490	1706	381	532
18"	20'-1"	20'-0"	19'-2"	200.0	12.2	43.9	187.8	156.1	8.87	1666	1385	4.2	154	419	215	63	851	2600C	1846 C	0T	47 C	1785	1974	418	556
20"	18'-1"	18'-0"	17'-2"	200.0	9.0	35.3	191.0	164.7	6.12	1169	1008	5.3	132	348	189	52	721	2400C	1167 C	0T	62 C	1510	1770	384	579
✱ 20"	20'-0"	19'-11"	19'-1"	200.0	9.8	37.9	190.2	162.1	7.65	1455	1240	4.8	160	416	214	62	852	2400C	1466 C	0T	50 C	1781	2037	412	612
20"	22'-1"	22'-0"	21'-2"	200.0	11.8	42.9	188.2	157.1	9.18	1728	1442	4.9	198	506	248	76	1028	2600C	1749 C	0T	29 C	2142	2374	443	629

NOTES:

1. "D" - DEPTH OF SLAB BEAM
   "BL" - OUT TO OUT BEAM LENGTH
   "SL" - SPAN LENGTH CENTER TO CENTER OF BEARINGS
2. ✱DENOTES STANDARD SPAN
3. FOR SERVICE LOAD STRESSES, "T" IS TENSION AND "C" IS COMPRESSION
4. TABLE VALUES OF MAXIMUM SERVICE MOMENTS AND CALCULATED STRESSES ARE PROVIDED FOR THE LOCATION OF MAXIMUM SERVICE MOMENT ALONG THE LENGTH OF THE SPAN, TYPICALLY AT OR NEAR MIDSPAN.
5. TABLE VALUES OF MAXIMUM ULTIMATE MOMENT DEMAND AND FACTORED MOMENT CAPACITY ARE PROVIDED FOR THE LOCATION OF MAXIMUM ULTIMATE MOMENT ALONG THE LENGTH OF THE SPAN, TYPICALLY AT OR NEAR MIDSPAN. THESE VALUES MAY NOT REPRESENT THE CRITICAL CAPACITY TO DEMAND RATIO FOR MOMENT ALONG THE ENTIRE LENGTH OF THE SPAN.
6. TABLE VALUES OF MAXIMUM ULTIMATE SHEAR DEMAND AND FACTORED SHEAR CAPACITY ARE PROVIDED AT "D"/2 FROM CENTERLINE OF BEARING. THESE VALUES MAY NOT REPRESENT THE CRITICAL CAPACITY TO DEMAND RATIO FOR SHEAR ALONG THE ENTIRE LENGTH OF THE SPAN.

REV.	DATE	DESCRIPTION	DES.	ENG.
X	XX-XX-XX	REVISION	XX	XX

DRAWN BY: HDR DATE: 03/31/2011

ASSISTANT DIRECTOR: STANDARDS & DESIGN

DIRECTOR OF ENGINEERING AND CONSTRUCTION

METROLINK®
SOUTHERN CALIFORNIA REGIONAL RAIL AUTHORITY
ONE GATEWAY PLAZA, 12TH FLOOR, L. A., CA. 90012

ENGINEERING STANDARDS

TABLE OF DESIGN LOAD EFFECTS
PRECAST/PRESTRESSED CONCRETE
SLAB BEAM BRIDGES

STANDARD 6002
SCALE: NTS
REVISION –
SHEET 3 OF 22
CADD FILE: ES6002-03

CONSTRUCTION NOTES:

PRECAST CONCRETE MEMBERS AND PRECAST/PRESTRESSED CONCRETE BEAMS:

PRECAST CONCRETE MEMBERS AND PRECAST/PRESTRESSED CONCRETE BEAMS SHALL MEET THE REQUIREMENTS OF SCRRA STANDARD SPECIFICATIONS SECTION 34 80 43: PRECAST AND PRESTRESSED CONCRETE FOR RAILROAD BRIDGES. MATERIALS SHALL NOT BE ORDERED AND FABRICATION SHALL NOT COMMENCE PRIOR TO ACCEPTANCE OF SHOP DRAWINGS BY SCRRA. MEMBERS AND BEAMS THAT DO NOT MEET THE REQUIRED SPECIFICATIONS WILL BE REJECTED. REJECTED MEMBERS AND BEAMS SHALL BE REPLACED BY THE CONTRACTOR AT NO ADDITIONAL COST TO SCRRA. MEMBERS AND BEAMS THAT HAVE BEEN DELIVERED AND ARE THEN REJECTED SHALL BE REMOVED FROM SCRRA PROPERTY AT NO ADDITIONAL COST TO SCRRA.

PILING:

STEEL BEARING PILES SHALL MEET THE REQUIREMENTS OF SCRRA STANDARD SPECIFICATIONS SECTION 34 80 21: PILING. PILES SHALL BE DRIVEN TO A MINIMUM ALLOWABLE COMPRESSIVE LOAD CAPACITY OF 150 TONS PER THE DYNAMIC FORMULA IN THE STANDARD SPECIFICATIONS OR TO PRACTICAL REFUSAL, IF POSSIBLE, WITHOUT DAMAGING THE PILES. MINIMUM PENETRATION SHALL BE 15 FEET BELOW NATURAL GROUND OR FINISHED GROUND LINE, WHICHEVER IS LOWER. PILES SHALL BE DRIVEN WITHIN 3" OF PLAN LOCATION AT CUTOFF, WITHIN 1/4" PER FOOT OF SPECIFIED BATTER LINE FOR BATTERED PILING AND WITHIN 1/4" PER FOOT OF VERTICAL FOR PLUMB PILING. PILES THAT DO NOT MEET THE REQUIRED TOLERANCES SHALL BE PULLED AND REDRIVEN OR CUTOFF AND REPLACED. CUTOFF PILES TO SPECIFIED ELEVATIONS AND PROPERLY PREPARE THE CUTOFF ENDS FOR WELDING. PILES SHALL NOT BE PULLED INTO POSITION FOR WELDING TO CAPS UNLESS OTHERWISE APPROVED BY SCRRA. A FULL PILE REPORT PER THE SPECIFICATIONS, INCLUDING DRIVING RECORDS AND ESTIMATED ALLOWABLE CAPACITIES FOR EACH PILE, SHALL BE PROVIDED TO SCRRA.

PLACING PRECAST CAPS:

PRECAST CAPS SHALL BE PLACED IN THE PROPER LOCATIONS AND SECURED PRIOR TO WELDING PILES TO PILE PLATES EMBEDDED IN CAPS. PROPER LOCATION OF PRECAST CAPS SHALL BE DETERMINED USING CONSTRUCTION SURVEYING WITH VERIFIED CONTROL AND CHECKED WITH TAPE MEASUREMENTS FROM A KNOWN REFERENCE POINT. AS-BUILT DIMENSIONS BETWEEN EMBEDDED PIPES IN EACH END OF BEAMS AND BETWEEN STEEL RODS (AR1) EMBEDDED IN CAPS IN ADJACENT BENTS SHALL BE CHECKED PRIOR TO WELDING PILES TO CAPS.

FIELD WELDING CAPS AND BRACING:

PILES SHALL BE WELDED TO PILE PLATES, FOLLOWED BY WELDING ANGLE BRACING TO THE INSIDE OF PILE FLANGES AS SHOWN ON THE DRAWINGS. WELDING SHALL MEET THE REQUIREMENTS OF AWS D1.5 BRIDGE WELDING CODE. WELDING SHALL BE ACCOMPLISHED USING THE SMAW OR FCAW PROCESS. WELDING ELECTRODES SHALL BE E7018 FOR SMAW OR E70T-5 FOR FCAW. WELDERS SHALL POSSESS VALID QUALIFICATIONS FOR THE TYPES OF WELDS AND WELDING POSITIONS REQUIRED.

INSTALLING WING WALLS:

ADJOINING SURFACES OF END CAP AND WING WALL SHALL BE COATED WITH GROUT. WHILE GROUT IS STILL PLIABLE, POSITION WING WALL OVER THREADED RODS AND HOLD IN PLACE, ADD WASHER W1 AND HEX NUT TO BOLTS, TIGHTEN NUTS AND TACK WELD NUTS TO WASHER. REPAIR DAMAGED GALVANIZED SURFACES.

CAST-IN-PLACE CONCRETE:

ALL CONCRETE MATERIALS, PLACEMENT AND WORKMANSHIP SHALL CONFORM TO SCRRA STANDARD SPECIFICATIONS SECTION 34 80 41: STRUCTURAL CONCRETE FOR RAILROAD AND CIVIL WORKS. REINFORCING STEEL MATERIALS AND PLACEMENT SHALL CONFORM TO SCRRA STANDARD SPECIFICATIONS SECTION 34 80 42: REINFORCEMENT FOR RAILROAD AND CIVIL WORKS. MINIMUM 28-DAY CONCRETE COMPRESSIVE STRENGTH SHALL BE 4000 PSI. THE PORTION OF PILING TO BE ENCASED IN CONCRETE SHALL BE CLEANED OF ALL DIRT, OIL AND GREASE AND ALL LOOSE SCALE AND RUST BEFORE CONCRETE IS PLACED TO PROVIDE ADEQUATE BOND.

PAINTING:

PAINTING SHALL BE IN ACCORDANCE WITH SCRRA STANDARD SPECIFICATIONS SECTION 34 80 61: PAINTING AND PROTECTIVE COATINGS FOR BRIDGES. THE EXPOSED PORTION OF PILE PLATES, PILING BETWEEN THE PILE PLATES AND CONCRETE COLLARS OR GROUND LINE, ANGLE BRACING AND ANY OTHER NON-GALVANIZED EXPOSED STEEL SHALL BE CLEANED PER SSPC SP 6 "COMMERCIAL BLAST CLEAN" AND PAINTED USING SYSTEM #19.

INSTALLING BEARING PADS:

RANDOM ORIENTED FIBER ELASTOMERIC BEARING PADS SHALL MEET THE REQUIREMENTS OF SCRRA STANDARD SPECIFICATIONS SECTION 34 80 43: PRECAST AND PRESTRESSED CONCRETE FOR RAILROAD BRIDGES. BEARING PADS SHALL BE ADHERED TO PRECAST CAPS AND PRECAST/PRESTRESSED CONCRETE BEAMS USING AN ADHESIVE RECOMMENDED BY THE BEARING PAD MANUFACTURER AND APPROVED BY SCRRA. BEARING AREAS ON CAPS AND BEAMS SHALL BE ABRASIVE BLAST CLEANED TO REMOVE ALL FORM OIL AND CURING AGENTS AND SHALL BE CLEANED TO A DUST-FREE CONDITION. ONCE BEARING AREAS HAVE BEEN ADEQUATELY CLEANED, APPLY A LIGHT SEAL COAT OF ADHESIVE TO CONCRETE SURFACE AND ALLOW TO DRY. COAT CONTACT SURFACES OF CONCRETE AND BEARING PADS WITH ADHESIVE, PLACE PADS ON CONCRETE SURFACE AND HOLD IN THE PROPER LOCATION UNTIL THE ADHESIVE HAS ATTAINED INITIAL SET.

ERECTION OF BEAMS:

BEAMS SHALL BE SET IN THE PROPER LOCATION, TAKING CARE NOT TO DAMAGE CONCRETE MEMBERS. AFTER BEAMS HAVE BEEN SET IN FINAL POSITION, FILL SWIFT LIFT CAVITIES WITH GREASE FLUSH TO TOP OF DECK.

DECK PLATES:

DECK PLATES MAY BE ADJUSTED AND TRIMMED AS NEEDED TO PROVIDE A TIGHT FIT. DUE TO LOCAL CONDITIONS, DECK PLATES AT JOINTS SHALL BE WELDED. REMOVE SCALE AND REPAIR GALVANIZED SURFACES AFTER COOLING.

WALKWAYS:

SIDEWALK BRACKETS SHALL BE ERECTED PLUMB AND IN-LINE. FINISHED WALKWAY SURFACE SHALL BE EVEN, WITH ANY ABRUPT CHANGES IN ELEVATION LIMITED TO 1/4" OR LESS. ATTACH WALKWAY GRATING TO SIDEWALK BRACKETS AS SHOWN ON THE DRAWINGS. GRATING PANEL LAYOUT SHALL BE ADJUSTED TO MINIMIZE DISTANCE THAT PANELS EXTEND ACROSS BRIDGE JOINTS. TRIM GRATING AS REQUIRED AND REPAIR DAMAGED GALVANIZED SURFACES.

HANDRAIL:

HANDRAIL POSTS, BRACES AND STRUTS SHALL BE GALVANIZED 2"x2" 20F12 UNISTRUT "TELESPAR". CABLE RAILS SHALL BE 5/16" DIA, 7x19 GALVANIZED AIRCRAFT CABLE. INTERIOR HANDRAIL TERMINATIONS SHALL BE PROVIDED AT EVERY TWO SPANS. SAFETY CHAIN SHALL BE USED FOR RAILS BETWEEN INTERIOR CABLE TERMINATIONS. ATTACH HANDRAIL COMPONENTS AS SHOWN ON THE DRAWINGS. REPAIR DAMAGED GALVANIZED SURFACES.

SIGNAL CONDUIT:

A MINIMUM OF TWO SIGNAL CONDUITS SHALL BE PROVIDED INSIDE THE CURB LINE ON EACH SIDE OF THE BRIDGE. CONDUIT SHALL CONSIST OF 4" DIA GALVANIZED STEEL PIPE. CONDUIT BRACKETS SHALL BE USED TO HOLD CONDUIT IN PLACE AND SHALL BE PLACED TO MISS DECK PLATES AND SIDEWALK BRACKETS. SPACING OF CONDUIT BRACKETS SHALL NOT EXCEED 6 FEET. INSTALL CONDUIT BRACKETS USING ADHESIVE ANCHORS. ADHESIVE ANCHORS SHALL BE HILTI HVA SYSTEM OR APPROVED EQUAL. FIELD DRILL 7/16" DIA x 3 1/2" HOLE INTO CONCRETE CURB, INSTALL HVU ADHESIVE CAPSULE AND 3/8" DIA x 5" THREADED ROD PER MANUFACTURER'S INSTRUCTIONS. CONDUITS INSTALLED ON BRIDGES WITHOUT HMA SHALL BE RAISED 3/4" TO ALLOW FOR DECK DRAINAGE.

MISCELLANEOUS STEEL AND HARDWARE:

MISCELLANEOUS STEEL ITEMS SHALL BE FABRICATED IN ACCORDANCE WITH SCRRA STANDARD SPECIFICATIONS SECTION 34 80 52: METAL FABRICATIONS FOR RAILROAD BRIDGES. STEEL ACCESSORIES AND HARDWARE SHALL BE GALVANIZED (HOT DIP OR MECHANICALLY ZINC COATED) UNLESS NOTED OTHERWISE.

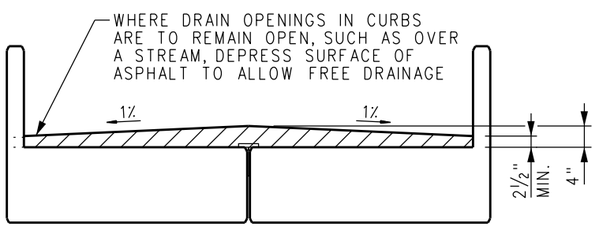

SECTION A
SCALE: NONE

NOTE:
HMA CROSS SLOPE SIMILAR ON BRIDGE APPROACH.

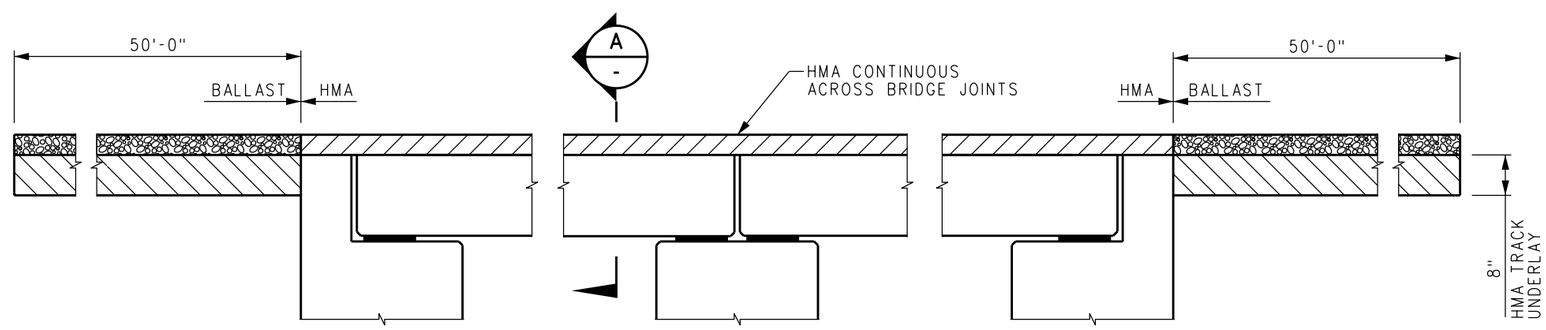

HMA DETAILS
SCALE: 1 1/2" = 1'-0"

REV.	DATE	DESCRIPTION	DES.	ENG.
A	04-17-13	REVISED HMA DETAILS	AC	NDP

DRAWN BY: A. CARLOS DATE: 04/12/02

ASSISTANT DIRECTOR: STANDARDS & DESIGN

DIRECTOR OF ENGINEERING AND CONSTRUCTION

METROLINK®
SOUTHERN CALIFORNIA REGIONAL RAIL AUTHORITY
ONE GATEWAY PLAZA, 12TH FLOOR, L. A., CA. 90012

ENGINEERING STANDARDS

CONSTRUCTION NOTES AND HMA DETAILS
PRECAST/PRESTRESSED CONCRETE
SLAB BEAM BRIDGES

STANDARD 6002
SCALE: AS NOTED
REVISION A SHEET 4 OF 22
CADD FILE: ES6002-04

SPAN TABLE							
BEAM MARK	NOMINAL SPAN	"BL"	"SL"	"A"	"B"	"C"	"D"
PB11.92	12'-0"	11'-11"	11'-1"	11'-7"	12'-0"	11'-9½"	12"
PB13.92	14'-0"	13'-11"	13'-1"	13'-7"	14'-0"	13'-9½"	14"
PB15.92	16'-0"	15'-11"	15'-1"	15'-7"	16'-0"	15'-9½"	16"
PB17.92	18'-0"	17'-11"	17'-1"	17'-7"	18'-0"	17'-9½"	18"
PB19.92	20'-0"	19'-11"	19'-1"	19'-7"	20'-0"	19'-9½"	20"

LIFTING WEIGHTS	
BEAM MARK	WEIGHT IN TONS
PB11.92-C	7.2
PB11.92	6.3
PB13.92-C	9.6
PB13.92	8.6
PB15.92-C	12.4
PB15.92	11.2
PB17.92-C	15.5
PB17.92	14.1
PB19.92-C	19.0
PB19.92	17.5

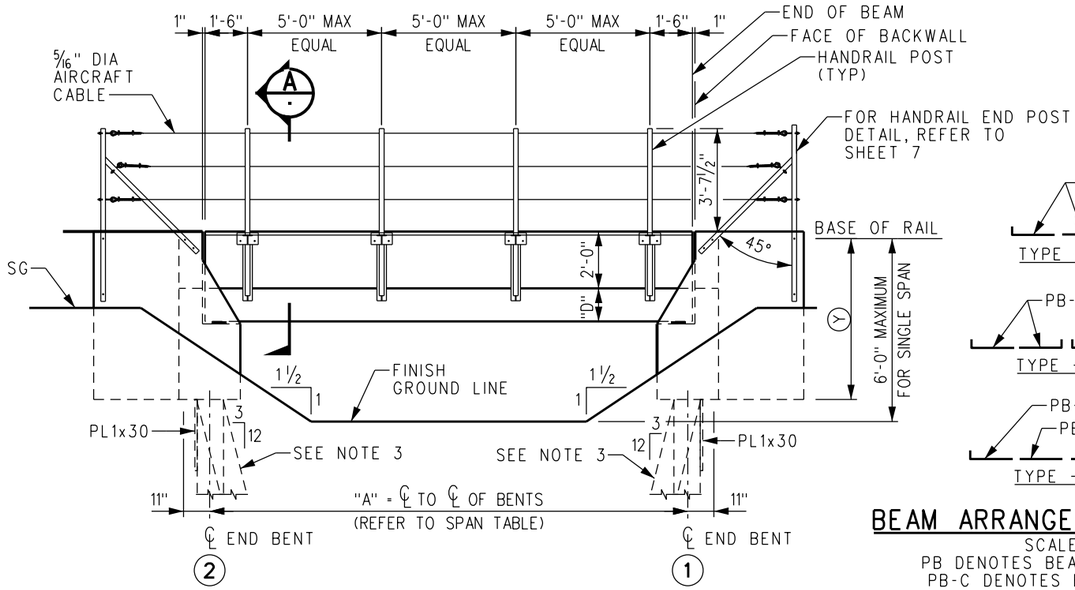

ELEVATION - SINGLE SPAN BRIDGE

SCALE: 3/8" = 1'-0"

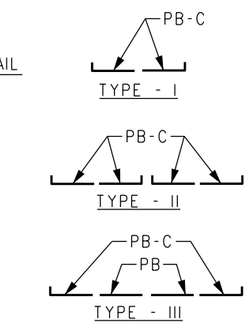

BEAM ARRANGEMENT DIAGRAMS

SCALE: NONE
PB DENOTES BEAM WITHOUT CURB.
PB-C DENOTES BEAM WITH CURB.

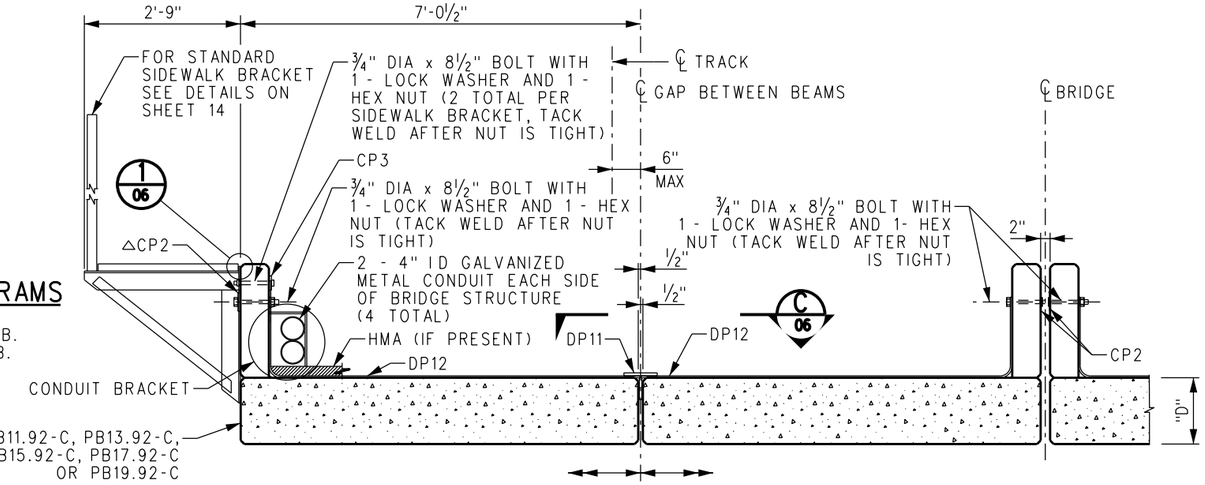

SECTION SHOWING BEAM WITH CURB AND WALKWAY BRACKET FOR SINGLE TRACK BRIDGE OR EXTERIOR OF DOUBLE TRACK BRIDGE

SECTION SHOWING DOUBLE TRACK BRIDGE AND INTERIOR BEAMS WITH CURBS

PARTIAL SECTION A

SCALE: ¾"=1'-0

△ AT END BENTS, SUBSTITUTE CURB ANGLE CA3 FOR CURB PLATE CP2.

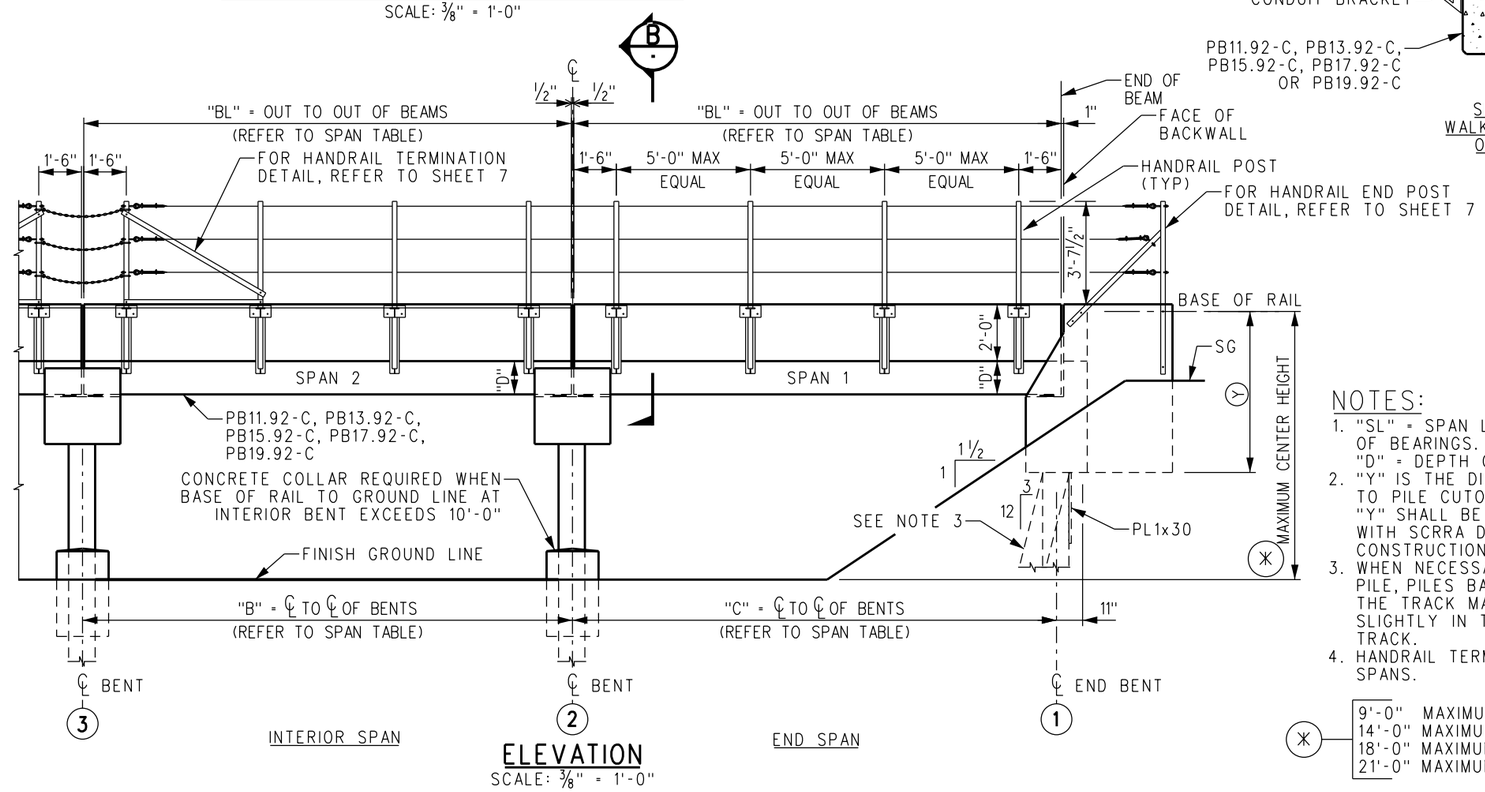

INTERIOR SPAN

END SPAN

ELEVATION

SCALE: 3/8" = 1'-0"

NOTES:

1. "SL" = SPAN LENGTH CENTER TO CENTER OF BEARINGS.
   "D" = DEPTH OF SLAB BEAM
2. "Y" IS THE DISTANCE FROM BASE OF RAIL TO PILE CUTOFF. FOR DESIGN ELEVATIONS, "Y" SHALL BE ESTABLISHED IN COORDINATION WITH SCRRA DIRECTOR OF ENGINEERING AND CONSTRUCTION.
3. WHEN NECESSARY TO CLEAR AN EXISTING PILE, PILES BATTERED IN THE DIRECTION OF THE TRACK MAY ALSO BE BATTERED SLIGHTLY IN THE DIRECTION NORMAL TO THE TRACK.
4. HANDRAIL TERMINATION REQUIRED EVERY 2 SPANS.

✳
9'-0" MAXIMUM FOR TWO SPANS
14'-0" MAXIMUM FOR THREE SPANS
18'-0" MAXIMUM FOR FOUR SPANS
21'-0" MAXIMUM FOR FIVE OR MORE SPANS

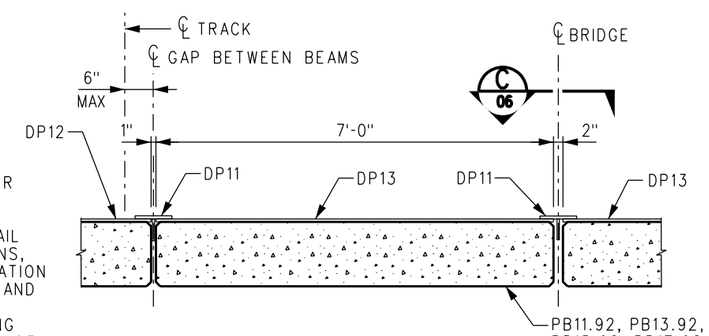

SECTION SHOWING DOUBLE TRACK BRIDGE AND INTERIOR BEAMS WITHOUT CURBS

PARTIAL SECTION B

SCALE: ¾"=1'-0

REV.	DATE	DESCRIPTION	DES.	ENG.
X	XX-XX-XX	REVISION	XX	XX

DRAWN BY: A. CARLOS DATE: 03/31/2011

ASSISTANT DIRECTOR: STANDARDS & DESIGN

DIRECTOR OF ENGINEERING AND CONSTRUCTION

METROLINK

SOUTHERN CALIFORNIA REGIONAL RAIL AUTHORITY
ONE GATEWAY PLAZA, 12TH FLOOR, L. A., CA. 90012

ENGINEERING STANDARDS

GENERAL ARRANGEMENT AND SECTIONS
PRECAST/PRESTRESSED CONCRETE
SLAB BEAM BRIDGES

STANDARD 6002
SCALE: AS NOTED
REVISION –
SHEET 5 OF 22
CADD FILE: ES6002-05

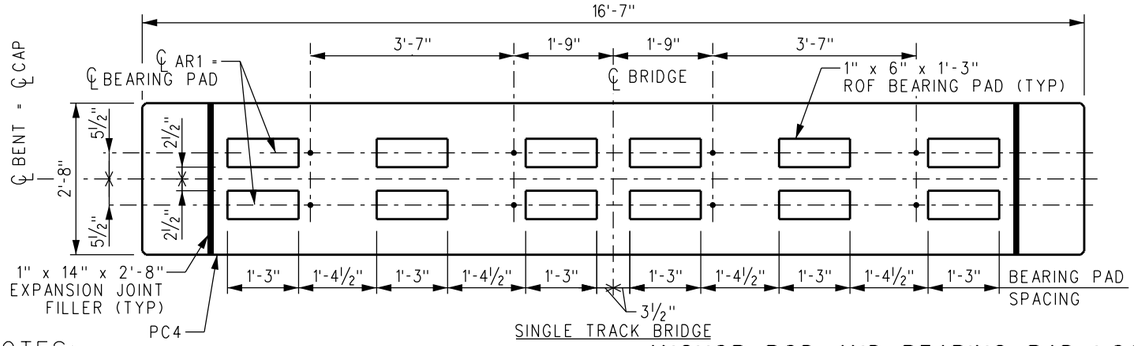

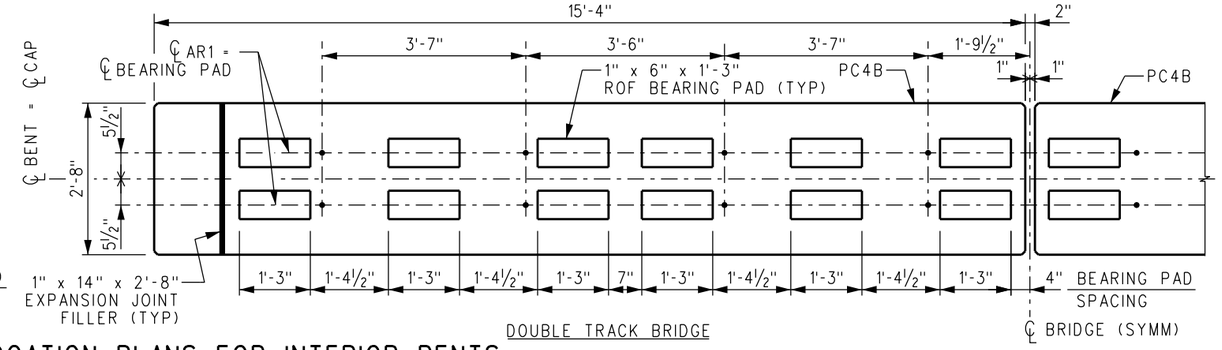

ANCHOR ROD AND BEARING PAD LOCATION PLANS FOR INTERIOR BENTS

SCALE: ¾" = 1'-0"

NOTES:

1. ROF = RANDOM ORIENTED FIBER
2. BEARING PADS AND EXPANSION JOINT FILLER ARE FIELD ATTACHED TO CAPS.

ANCHOR ROD AR1 MUST BE PLACED WITHIN ¼" OF PLAN LOCATION OR BEAMS WILL NOT FIT

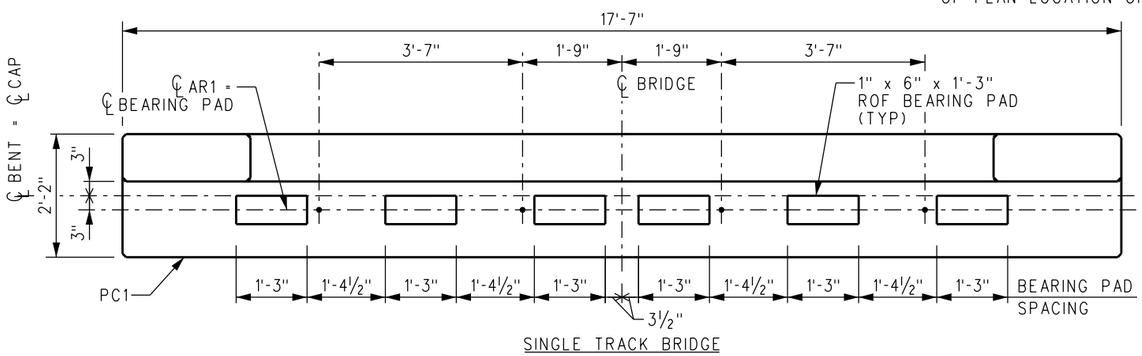

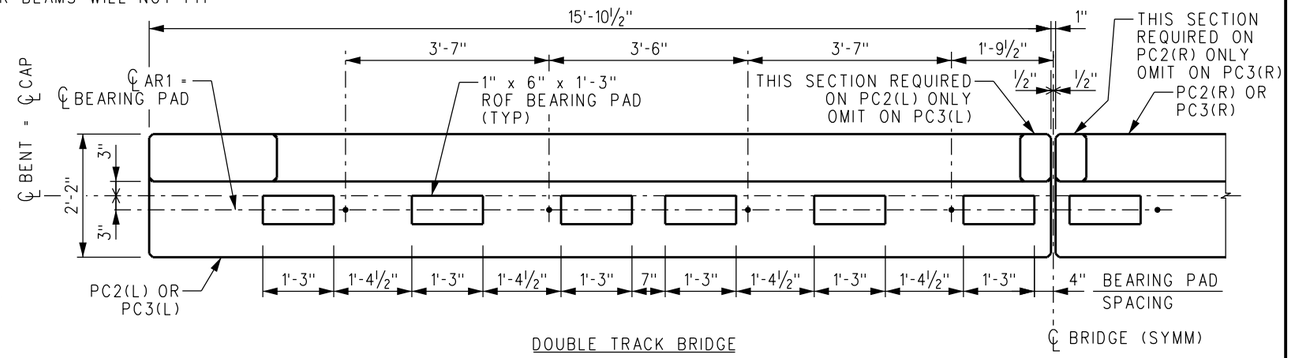

ANCHOR ROD AND BEARING PAD LOCATION PLANS FOR END BENTS

SCALE: ¾" = 1'-0"

ANCHOR ROD AR1 MUST BE PLACED WITHIN ¼" OF PLAN LOCATION OR BEAMS WILL NOT FIT

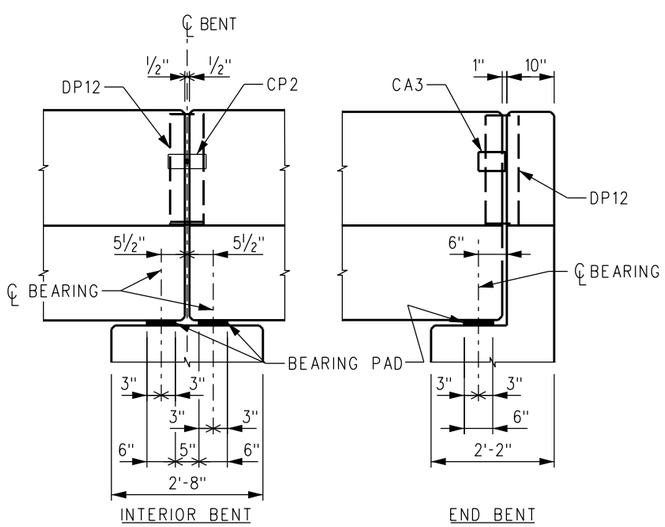

BEARING DETAILS

SCALE: ¾" = 1'-0"
HANDRAILS NOT SHOWN FOR CLARITY

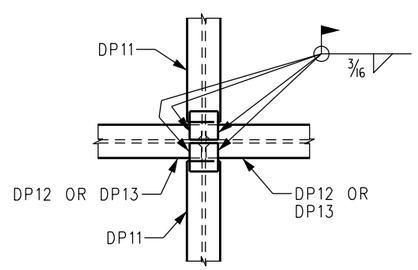

VIEW C/05
SCALE: ¾" = 1'-0

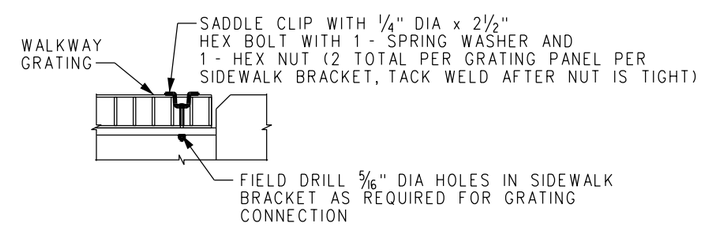

DETAIL 1/05
SCALE: NONE

REV.	DATE	DESCRIPTION	DES.	ENG.
X	XX-XX-XX	REVISION	XX	XX

DRAWN BY: A.CARLOS DATE: 03/31/2011

ASSISTANT DIRECTOR: STANDARDS & DESIGN

DIRECTOR OF ENGINEERING AND CONSTRUCTION

METROLINK®
SOUTHERN CALIFORNIA REGIONAL RAIL AUTHORITY
ONE GATEWAY PLAZA, 12TH FLOOR, L. A., CA. 90012

ENGINEERING STANDARDS

GENERAL DETAILS
PRECAST/PRESTRESSED CONCRETE
SLAB BEAM BRIDGES

STANDARD 6002
SCALE: AS NOTED
REVISION –
SHEET 6 OF 22
CADD FILE: ES6002-06

NOTE:
1. INSTALL SAFETY CHAIN WITH A 3" SAG.

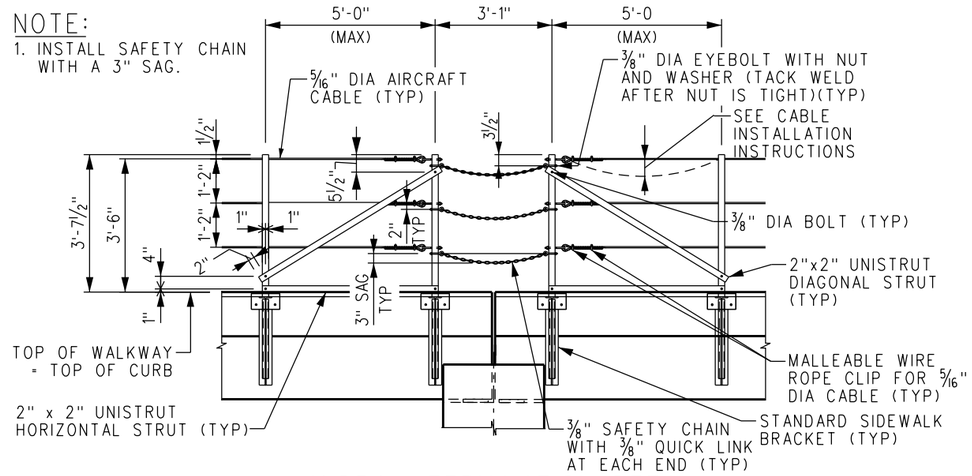

HANDRAIL TERMINATION DETAIL

SCALE: NONE

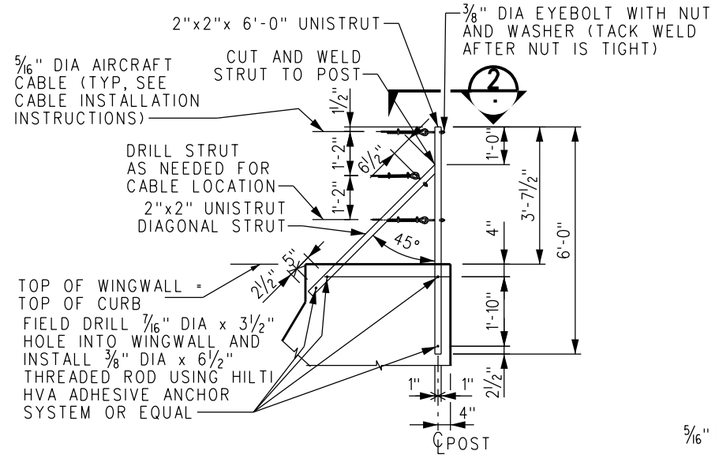

HANDRAIL END POST DETAILS

SCALE: 1/2" = 1'-0"

BASE OF RAIL TO PILE CUTOFF FOR SLABS			
SPAN LENGTH	"D"	END BENTS "Y"	INTERIOR BENTS "Y"
12'-0"	12"	5'-6"	4'-6"
14'-0"	14"	5'-8"	4'-8"
16'-0"	16"	5'-10"	4'-10"
18'-0"	18"	6'-0"	5'-0"
20'-0"	20"	6'-2"	5'-2"

NOTES:
1. TABLE "Y" VALUES FOR A TOTAL OF 12" DEPTH (BALLAST PLUS HMA) BELOW STANDARD CONCRETE TIES.
2. "D" = DEPTH OF SLAB BEAM

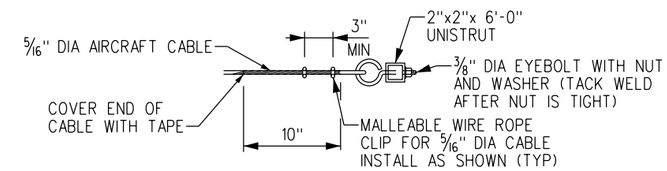

VIEW 2

SCALE: NONE

NOTES:
1. ALL PILES ARE HP14x117, ASTM A572 GRADE 50 STEEL BEARING PILES UNLESS OTHERWISE SPECIFIED BY THE ENGINEER.
2. AFTER PRECAST CONCRETE MEMBERS ARE SET, FILL RECESSES AT LIFT ANCHORS WITH EPOXY GROUT TO TOP OF SURROUNDING CONCRETE.
3. FOR "TYPICAL PILE SPLICE DETAIL" AND "WING WALL TO END CAP DETAILS" SEE SHEET 10.
4. "Y" IS THE DISTANCE FROM THE BASE OF RAIL TO PILE CUTOFF. FOR DESIGN ELEVATIONS, "Y" SHALL BE ESTABLISHED IN COORDINATION WITH SCRRA DIRECTOR OF ENGINEERING AND CONSTRUCTION. FOR A TOTAL OF 12" DEPTH (BALLAST PLUS HMA) BELOW STANDARD CONCRETE TIES, "Y" IS PROVIDED FOR STANDARD SLAB BEAM SPANS IN THE TABLE "BASE OF RAIL TO PILE CUTOFF FOR SLABS".

CABLE INSTALLATION INSTRUCTIONS:

1. THREAD CABLE THROUGH ALL HANDRAIL POSTS AND EYEBOLTS ON ONE END HANDRAIL POST.
2. STRETCH CABLE, HANG A MINIMUM OF 10 LBS ON CABLE BETWEEN TWO POSTS, AND REMOVE SAG TO A MAXIMUM OF 2 INCHES.
3. TIGHTEN CLIPS AND EYEBOLTS AT REMAINING END HANDRAIL POST.
4. REMOVE WEIGHTS.

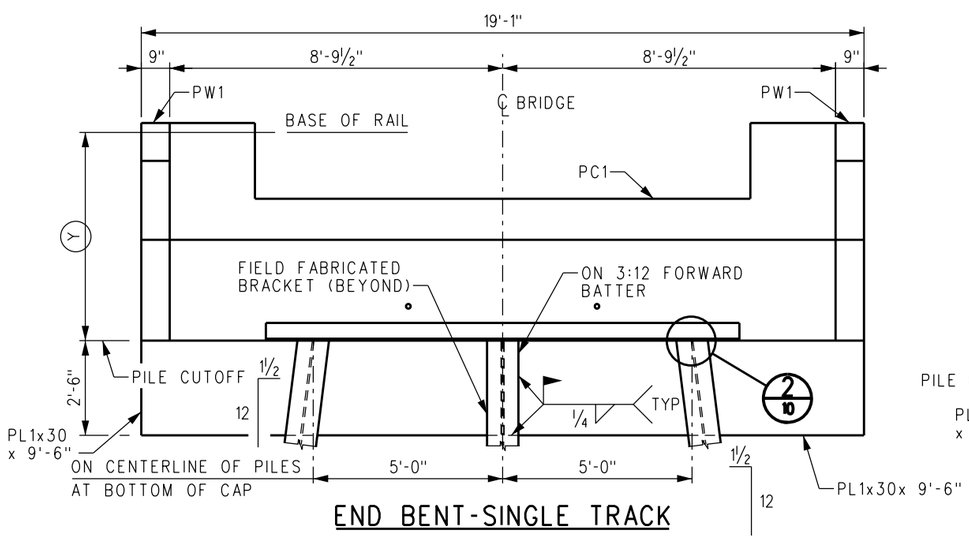

END BENT-SINGLE TRACK

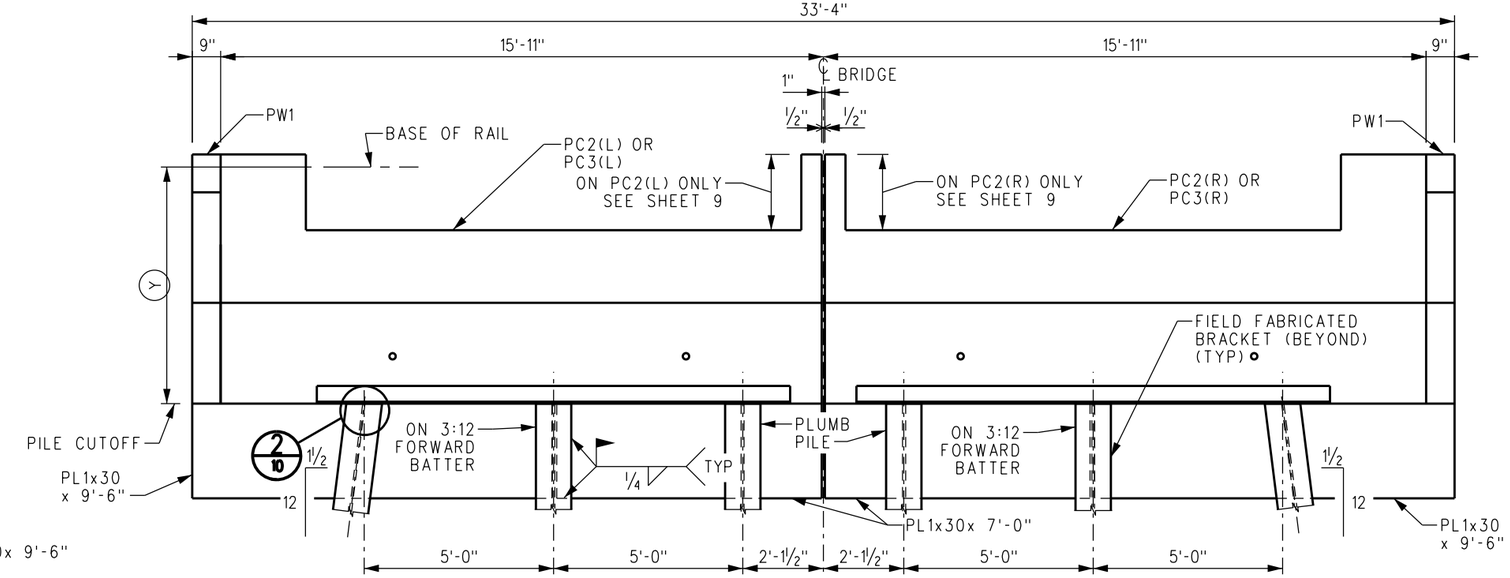

END BENT - DOUBLE TRACK

REV.	DATE	DESCRIPTION	DES.	ENG.
X	XX-XX-XX	REVISION	XX	XX

DRAWN BY: A. CARLOS DATE: 03/31/2011

ASSISTANT DIRECTOR: STANDARDS & DESIGN

DIRECTOR OF ENGINEERING AND CONSTRUCTION

METROLINK®
SOUTHERN CALIFORNIA REGIONAL RAIL AUTHORITY
ONE GATEWAY PLAZA, 12TH FLOOR, L. A., CA. 90012

ENGINEERING STANDARDS

HANDRAIL DETAILS AND END BENTS
PRECAST/PRESTRESSED CONCRETE
SLAB BEAM BRIDGES

STANDARD 6002
SCALE: 1/2" = 1'-0"
REVISION –
SHEET 7 OF 22
CADD FILE: ES6002-07

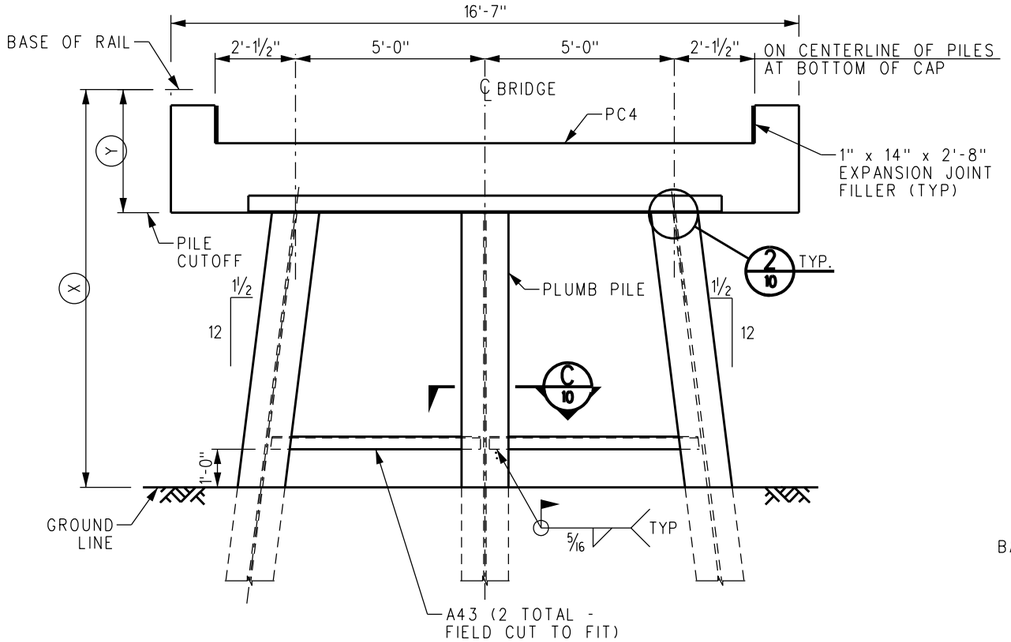

INTERIOR BENT-SINGLE TRACK

H1 - "X" = UP TO 10'-0"

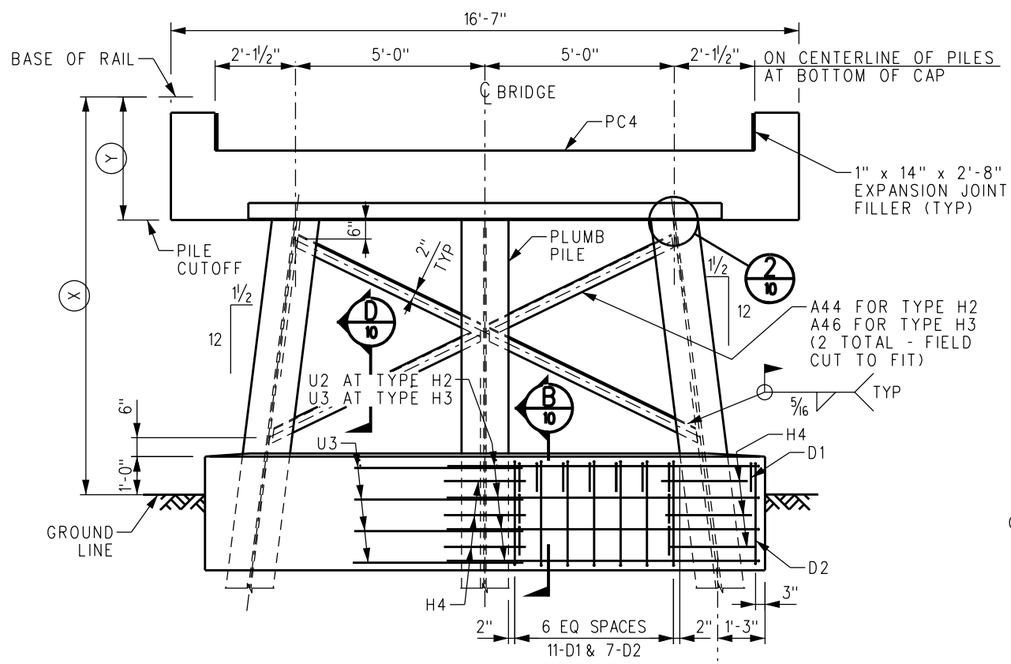

INTERIOR BENT-SINGLE TRACK

TYPE H2 - "X" = 10'-1" TO 13'-0"
TYPE H3 - "X" = 13'-1" TO 16'-0"

℄ PILE AT BOTTOM OF COLLAR

NOTES:

1. ALL PILES ARE HP14x117, ASTM A572 GRADE 50 STEEL BEARING PILES UNLESS OTHERWISE SPECIFIED BY THE ENGINEER.
2. ALL BRACING ANGLES TO BE CUT TO LENGTH AS REQUIRED.
3. AFTER PRECAST CONCRETE MEMBERS ARE SET, FILL RECESSES AT LIFT ANCHORS WITH EPOXY GROUT TO TOP OF SURROUNDING CONCRETE.
4. FOR "TYPICAL PILE SPLICE DETAIL" SEE SHEET 10.
5. THE FOLLOWING FORMULA WILL GIVE ESTIMATED QUANTITIES OF CONCRETE IN THE CONCRETE COLLARS IN CUBIC YARDS;
   BENTS H2, H3, H4 AND H5 - 0.07 x "X" + 3.3
   WHERE "X" IS THE DISTANCE FROM BASE OF RAIL TO GROUND LINE IN FEET.
6. "Y" IS THE DISTANCE FROM THE BASE OF RAIL TO PILE CUTOFF. FOR DESIGN ELEVATIONS, "Y" SHALL BE ESTABLISHED IN COORDINATION WITH SCRRA DIRECTOR OF ENGINEERING AND CONSTRUCTION. FOR A TOTAL OF 12" DEPTH (BALLAST PLUS HMA) BELOW STANDARD CONCRETE TIES, "Y" IS PROVIDED FOR STANDARD SLAB BEAM SPANS IN THE TABLE "BASE OF RAIL TO PILE CUTOFF FOR SLABS".

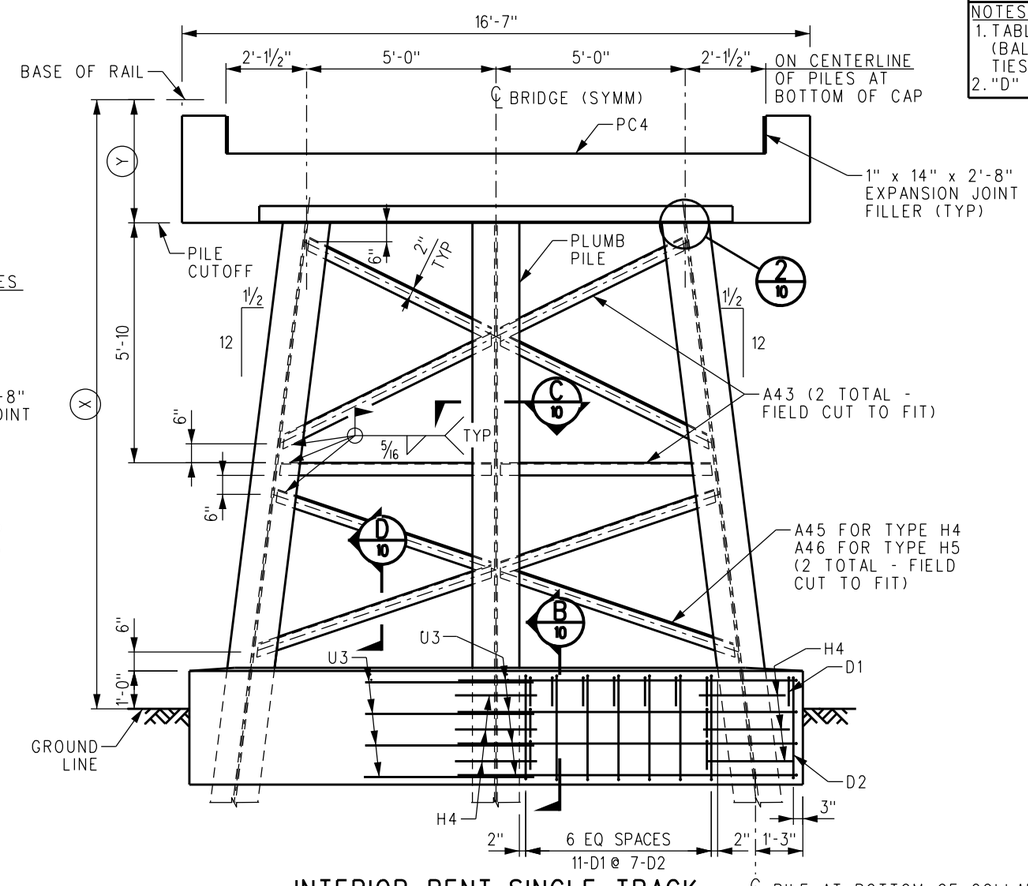

INTERIOR BENT-SINGLE TRACK

TYPE H4 - "X" = 16'-1" TO 18'-0"
TYPE H5 - "X" = 18'-1" TO 21'-0"

℄ PILE AT BOTTOM OF COLLAR

REINFORCING STEEL REQUIRED PER CONCRETE COLLAR

BENT TYPE			REINFORCING STEEL MARK
H2	H3	H4	
24	24	24	D1
16	16	16	D2
9	9	9	H4, #4 x 3'-0" (STRAIGHT)
4	-	-	U2
4	8	8	U3

BASE OF RAIL TO PILE CUTOFF FOR SLABS

SPAN LENGTH	"D"	END BENTS "Y"	INTERIOR BENTS "Y"
12'-0"	12"	5'-6"	4'-6"
14'-0"	14"	5'-8"	4'-8"
16'-0"	16"	5'-10"	4'-10"
18'-0"	18"	6'-0"	5'-0"
20'-0"	20"	6'-2"	5'-2"

NOTES:
1. TABLE "Y" VALUES FOR A TOTAL OF 12" DEPTH (BALLAST PLUS HMA) BELOW STANDARD CONCRETE TIES.
2. "D" = DEPTH OF SLAB BEAM

ESTIMATED QUANTITIES PER COLLAR

BENT TYPE	REINFORCING STEEL (LBS)
H2	259
H3	264
H4	264

REV.	DATE	DESCRIPTION	DES.	ENG.
X	XX-XX-XX	REVISION	XX	XX

DRAWN BY: A. CARLOS DATE: 03/31/2011

ASSISTANT DIRECTOR: STANDARDS & DESIGN

DIRECTOR OF ENGINEERING AND CONSTRUCTION

METROLINK
SOUTHERN CALIFORNIA REGIONAL RAIL AUTHORITY
ONE GATEWAY PLAZA, 12TH FLOOR, L. A., CA. 90012

ENGINEERING STANDARDS

INTERIOR PILE BENTS (1 OF 2)
PRECAST/PRESTRESSED CONCRETE
SLAB BEAM BRIDGES

STANDARD 6002
SCALE: ½" = 1'-0"
REVISION –
SHEET 8 OF 22
CADD FILE: ES6002-08

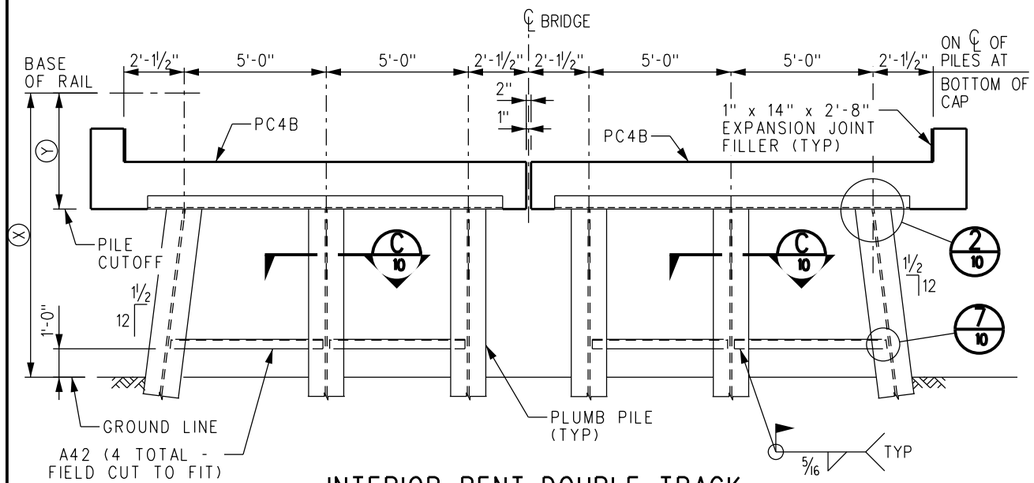

INTERIOR BENT-DOUBLE TRACK

TYPE H6 - "X" UP TO 10'-0"

NOTES:

1. ALL PILES ARE HP14x117, ASTM A572 GRADE 50 STEEL BEARING PILES UNLESS OTHERWISE SPECIFIED BY THE ENGINEER.
2. ALL BRACING ANGLES TO BE CUT TO LENGTH AS REQUIRED.
3. AFTER PRECAST CONCRETE MEMBERS ARE SET, FILL RECESSES AT LIFT ANCHORS WITH EPOXY GROUT TO TOP OF SURROUNDING CONCRETE.
4. FOR "TYPICAL PILE SPLICE DETAIL" AND "WING WALL TO END CAP DETAILS" SEE SHEET 10.
5. THE FOLLOWING FORMULA WILL GIVE ESTIMATED QUANTITIES OF CONCRETE IN THE CONCRETE COLLARS IN CUBIC YARDS;
   BENTS H7, H8 H9 AND H10 - 0.07 x "X" + 7.3
   WHERE "X" IS THE DISTANCE FROM BASE OF RAIL TO GROUND LINE IN FEET.
6. "Y" IS THE DISTANCE FROM THE BASE OF RAIL TO PILE CUTOFF. FOR DESIGN ELEVATIONS, "Y" SHALL BE ESTABLISHED IN COORDINATION WITH SCRRA DIRECTOR OF ENGINEERING AND CONSTRUCTION. FOR A TOTAL OF 12" DEPTH (BALLAST PLUS HMA) BELOW STANDARD CONCRETE TIES, "Y" IS PROVIDED FOR STANDARD SLAB BEAM SPANS IN THE TABLE "BASE OF RAIL TO PILE CUTOFF FOR SLABS".

BASE OF RAIL TO PILE CUTOFF FOR SLABS

SPAN LENGTH	"D"	END BENTS "Y"	INTERIOR BENTS "Y"
12'-0"	12"	5'-6"	4'-6"
14'-0"	14"	5'-8"	4'-8"
16'-0"	16"	5'-10"	4'-10"
18'-0"	18"	6'-0"	5'-0"
20'-0"	20"	6'-2"	5'-2"

NOTES:
1. TABLE "Y" VALUES FOR A TOTAL OF 12" DEPTH (BALLAST PLUS HMA) BELOW STANDARD CONCRETE TIES.
2. "D" = DEPTH OF SLAB BEAM

REINFORCING STEEL REQUIRED PER CONCRETE COLLAR

BENT TYPE				REINFORCING STEEL MARK
H7	H8	H9	H10	
50	50	52	52	D1
32	32	32	32	D2
18	18	18	18	H4, *4x3'-0" (STRAIGHT)
16	16	-	-	U1
-	-	16	16	U2

ESTIMATED QUANTITIES PER COLLAR

BENT TYPE	REINFORCING STEEL (LBS)
H7	497
H8	497
H9	517
H10	517

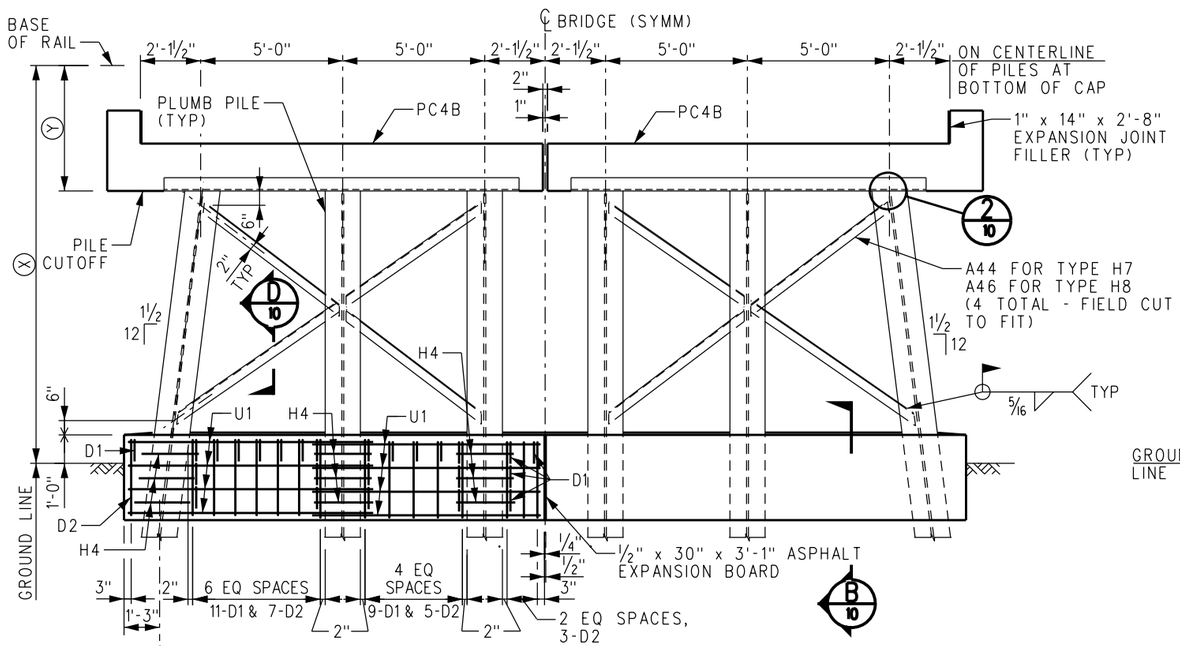

INTERIOR BENT-DOUBLE TRACK

TYPE H7 - "X" = 10'-1" TO 13'-0"
TYPE H8 - "X" = 13'-1" TO 16'-0"

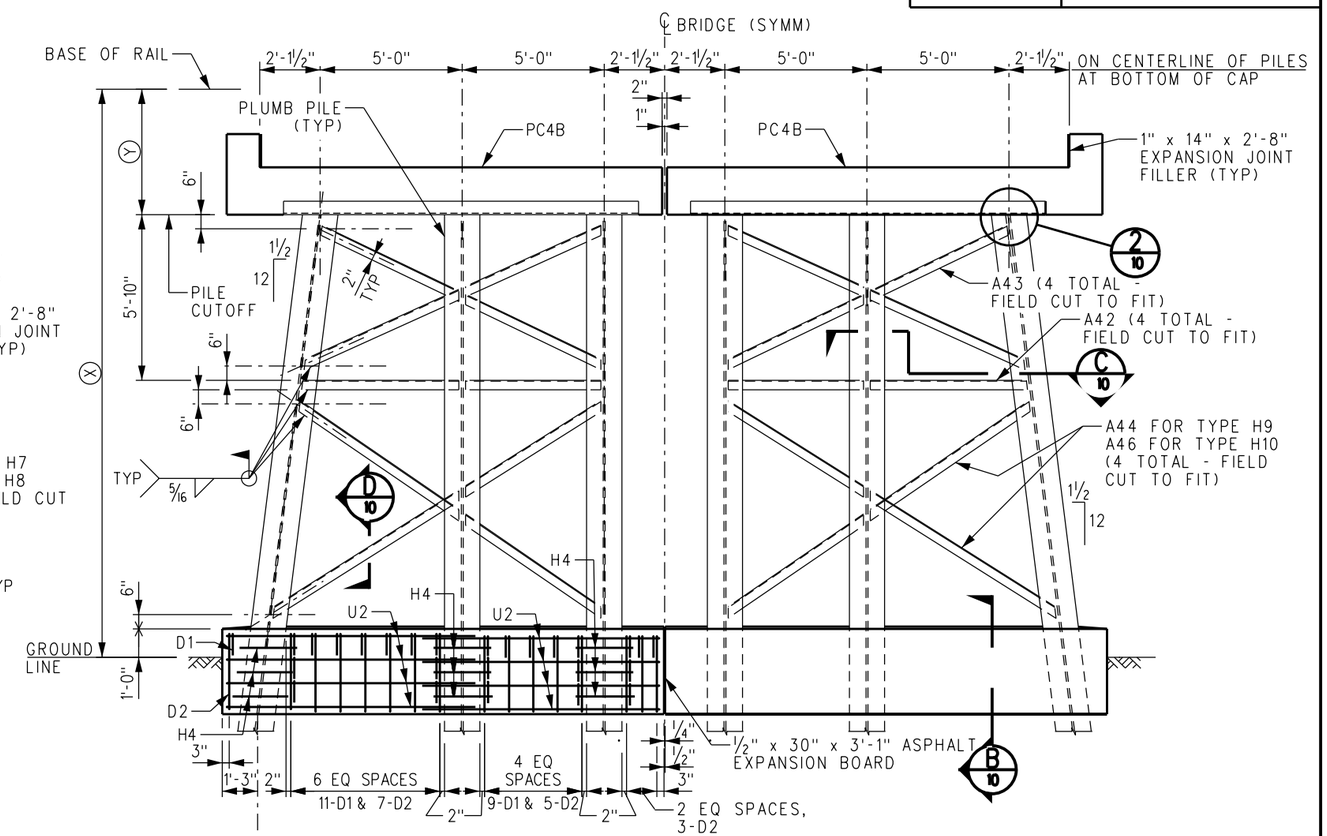

INTERIOR BENT-DOUBLE TRACK

TYPE H9 - "X" = 16'-1" TO 18'-0"
TYPE H10 - "X" = 18'-1" TO 21'-0"

REV.	DATE	DESCRIPTION	DES.	ENG.
X	XX-XX-XX	REVISION	XX	XX

DRAWN BY: A. CARLOS DATE: 03/31/2011

ASSISTANT DIRECTOR: STANDARDS & DESIGN

DIRECTOR OF ENGINEERING AND CONSTRUCTION

METROLINK®
SOUTHERN CALIFORNIA REGIONAL RAIL AUTHORITY
ONE GATEWAY PLAZA, 12TH FLOOR, L. A., CA. 90012

ENGINEERING STANDARDS

INTERIOR PILE BENTS (2 OF 2)
PRECAST/PRESTRESSED CONCRETE
SLAB BEAM BRIDGES

STANDARD 6002
SCALE: 3/8" = 1'-0"
REVISION –
SHEET 9 OF 22
CADD FILE: ES6002-09

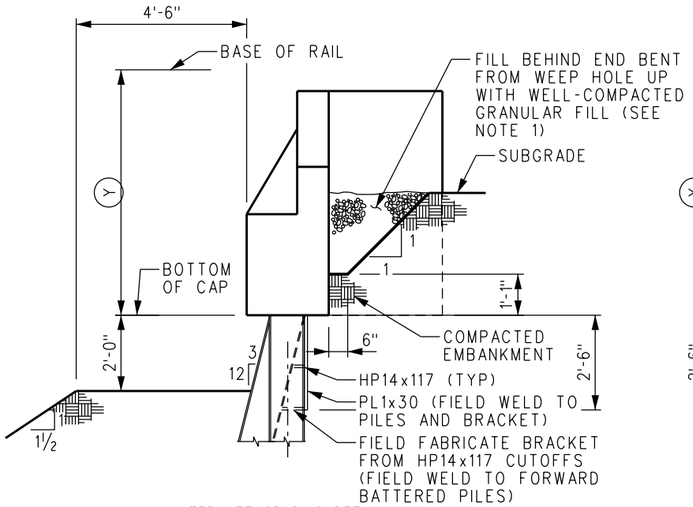

ALTERNATE GRADING DETAIL

DETAIL 8

SCALE: NONE

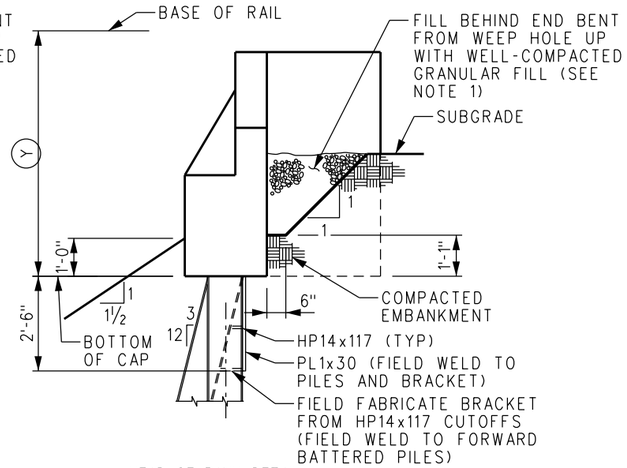

HEAD OF BANK DETAIL

DETAIL 8

SCALE: NONE

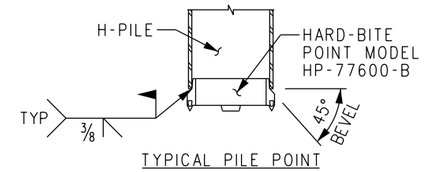

TYPICAL PILE POINT

TIP REINFORCEMENT INSTALLATION INSTRUCTIONS

1. FIT POINT ONTO SQUARE CUT PILE.
2. WELD POINT TO THE PILE IN EITHER FLAT OR VERTICAL POSITION, USING
3. E70XX ELECTRODES. FILL THE AREA ACROSS BOTH FLANGES WITH WELD.

ALTERNATE PILE SPLICING TO BE APPROVED BY ENGINEER.

DETAIL 4

SCALE: NONE

NOTES:

1. BEFORE BACKFILLING END BENTS APPLY A COATING OF PETROLATUM TO PILE PLATES, CONNECTION BARS, BACKWALL PLATES AND TOP 2'-6" OF PILES.
2. BACKFILL BEHIND END BENTS WITH FREE DRAINING MATERIAL TO THE LIMITS SHOWN ON THIS SHEET. MATERIAL SHALL MEET REQUIREMENTS OF ASTM C33 SPECIFICATION AND SHALL BE A WELL GRADED MIXTURE OF SAND AND GRAVEL WITH THE FOLLOWING GRADATIONS:
   100% PASSING THE 1" SIEVE
   60% PASSING THE #4 SIEVE
   5% PASSING #200 SIEVE, MAX
3. "Y" IS THE DISTANCE FROM THE BASE OF RAIL TO PILE CUTOFF. FOR DESIGN ELEVATIONS, "Y" SHALL BE ESTABLISHED IN COORDINATION WITH SCRRA DIRECTOR OF ENGINEERING AND CONSTRUCTION. FOR A TOTAL OF 12" DEPTH (BALLAST PLUS HMA) BELOW STANDARD CONCRETE TIES, "Y" IS PROVIDED FOR STANDARD SLAB BEAM SPANS IN THE TABLE "BASE OF RAIL TO PILE CUTOFF FOR SLABS" SHOWN ON SHEET 7.

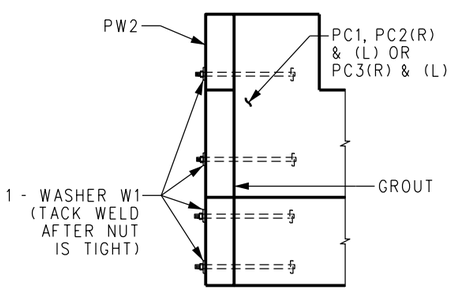

WING WALL TO END CAP DETAIL

DETAIL 1

SCALE: NONE

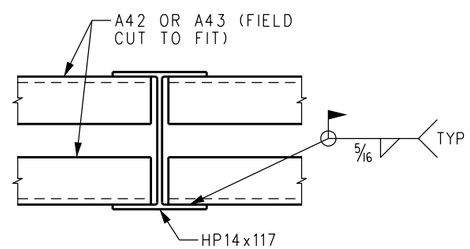

SECTION C 08 / C 09

SCALE: NONE

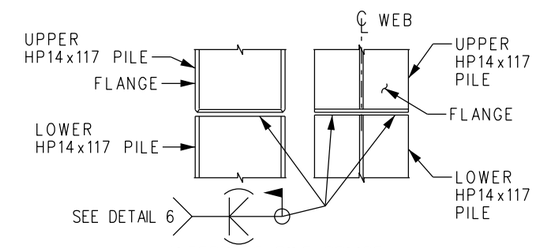

ALTERNATE PILE SPLICE

DETAIL 3

SCALE: 1"=1'-0"

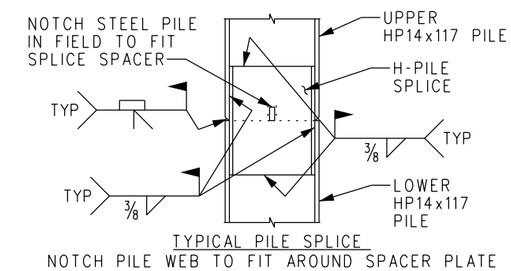

TYPICAL PILE SPLICE

NOTCH PILE WEB TO FIT AROUND SPACER PLATE

DETAIL 5

SCALE: NONE

PILE SPLICE FOR HP14x117 INSTALLATION INSTRUCTIONS:

1. NOTCH THE END OF UPPER LENGTH OF H-PILE (TO ACCOMMODATE THE SPLICE SPACER BAR).
2. FIT SPLICE OVER NOTCHED END OF UPPER H-PILE, AND WELD CORNERS.
3. PLACE THE UPPER SECTION AND SPLICER INTO POSITION ONTO THE LOWER SECTION.
4. WELD ALONG THE OUTSIDE OF THE WEB AND ALONG THE LOWER CORNERS OF THE SPLICE.
5. WELD JOINT BETWEEN UPPER AND LOWER PILE.

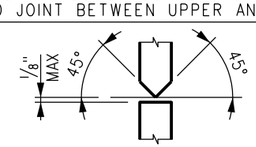

DETAIL 6

SCALE: NONE

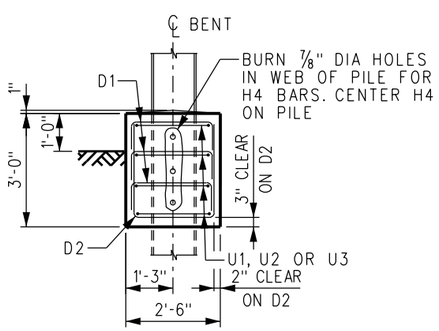

SECTION B 08 / B 09

SCALE: 1/2"=1'-0"

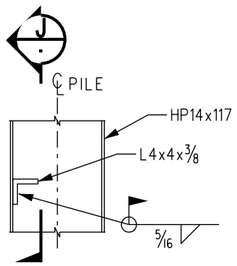

SECTION D 08 / D 09

SCALE: 1"=1'-0"

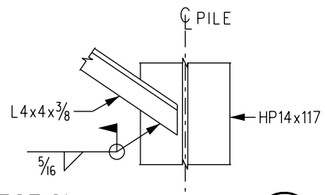

SECTION E

SCALE: 1"=1'-0"

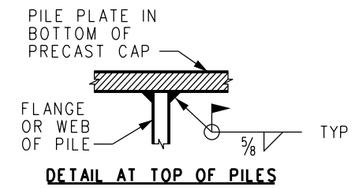

DETAIL AT TOP OF PILES

DETAIL 2 07 / 2 08 / 2 09

SCALE: NONE

REV.	DATE	DESCRIPTION	DES.	ENG.
X	XX-XX-XX	REVISION	XX	XX

DRAWN BY: A. CARLOS DATE: 03/31/2011

ASSISTANT DIRECTOR: STANDARDS & DESIGN

DIRECTOR OF ENGINEERING AND CONSTRUCTION

METROLINK®

SOUTHERN CALIFORNIA REGIONAL RAIL AUTHORITY
ONE GATEWAY PLAZA, 12TH FLOOR, L. A., CA. 90012

ENGINEERING STANDARDS

BENT DETAILS
PRECAST/PRESTRESSED CONCRETE
SLAB BEAM BRIDGES

STANDARD 6002
SCALE: AS NOTED
REVISION –
SHEET 10 OF 22
CADD FILE: ES6002-10

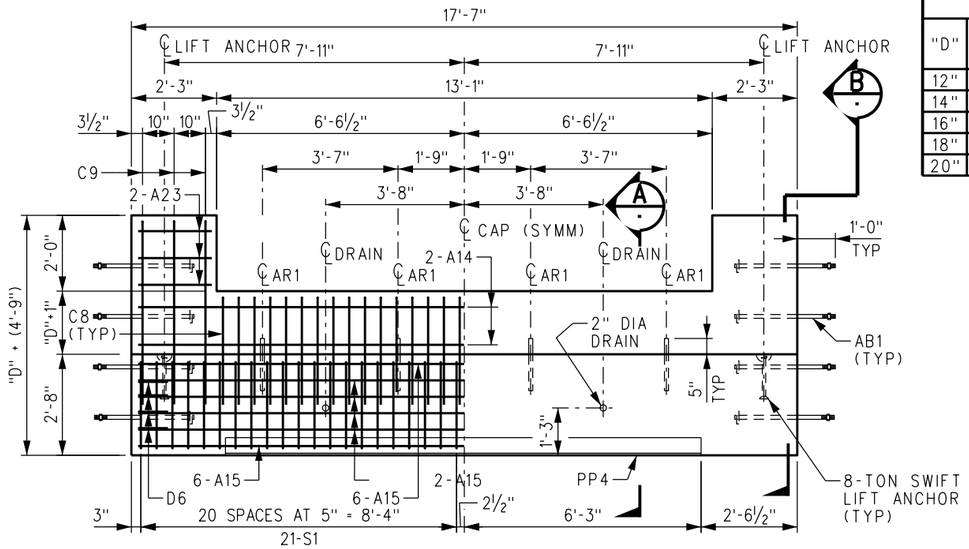

PRECAST CAP PC1

SCALE: ½"=1'-0
ESTIMATED LIFTING WEIGHT: SEE TABLE
REQUIRED VOLUME OF CONCRETE: SEE TABLE
WEIGHT OF REINFORCING STEEL = 1050 LBS

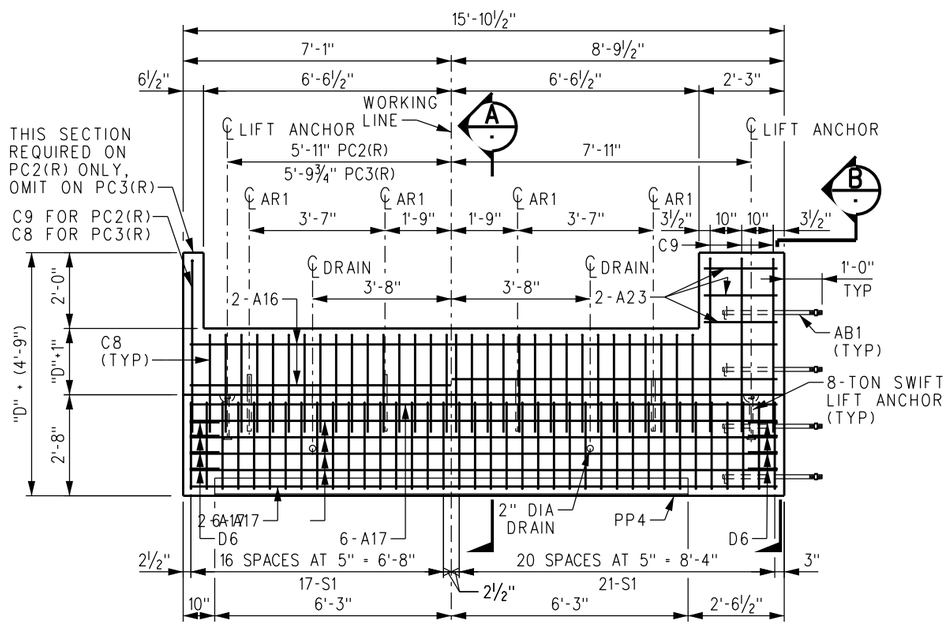

PRECAST CAP PC2(R)

SCALE: ½"=1'-0
ESTIMATED LIFTING WEIGHT: SEE TABLE
REQUIRED VOLUME OF CONCRETE: SEE TABLE
WEIGHT OF REINFORCING STEEL = 944 LBS
(PRECAST CAP PC2(L) OPPOSITE HAND)

PRECAST CAP PC3(R)

SCALE: ½"=1'-0
ESTIMATED LIFTING WEIGHT: SEE TABLE
REQUIRED VOLUME OF CONCRETE: SEE TABLE
WEIGHT OF REINFORCING STEEL = 941 LBS
(PRECAST CAP PC3(L) OPPOSITE HAND)

PRECAST CAP PC1

"D"	VOLUME OF CONCRETE	ESTIMATED WEIGHT
12"	4.0 CY	8.6 TONS
14"	4.2 CY	9.1 TONS
16"	4.4 CY	9.5 TONS
18"	4.7 CY	10.0 TONS
20"	4.9 CY	10.5 TONS

PRECAST CAP PC2(R) OR PC2(L)

"D"	VOLUME OF CONCRETE	ESTIMATED WEIGHT
12"	3.4 CY	7.4 TONS
14"	3.6 CY	7.9 TONS
16"	3.9 CY	8.4 TONS
18"	4.1 CY	8.8 TONS
20"	4.3 CY	9.3 TONS

PRECAST CAP PC3(R) OR PC3(L)

"D"	VOLUME OF CONCRETE	ESTIMATED WEIGHT
12"	3.4 CY	7.3 TONS
14"	3.6 CY	7.8 TONS
16"	3.8 CY	8.3 TONS
18"	4.1 CY	8.8 TONS
20"	4.3 CY	9.2 TONS

REINFORCING SCHEDULE

REQUIRED PER PRECAST CAP					DESCRIPTION
PC1	PC2(R)	PC2(L)	PC3(R)	PC3(L)	
4	-	-	-	-	BAR A14, #5 x 17'-3" (STRAIGHT)
20	-	-	-	-	BAR A15, #6 x 17'-3" (STRAIGHT)
-	4	4	4	4	BAR A16, #5 x 15'-6" (STRAIGHT)
-	20	20	20	20	BAR A17, #6 x 15'-6" (STRAIGHT)
12	6	6	6	6	BAR A23, #4 x 1'-11" (STRAIGHT)
32	32	32	33	33	BAR C8, #4 x 5'-8" (SEE DETAIL, SHEET 15)
6	4	4	3	3	BAR C9, #4 x 9'-8" (SEE DETAIL, SHEET 15)
8	8	8	8	8	BAR D6, #4 x 3'-3" (SEE DETAIL, SHEET 15)
42	38	38	38	38	BAR S1, #4 x 9'-6" (SEE DETAIL, SHEET 15)

MISCELLANEOUS STEEL SCHEDULE

REQUIRED PER PRECAST CAP					DESCRIPTION
PC1	PC2(R)	PC2(L)	PC3(R)	PC3(L)	
8	4	4	4	4	ANCHOR BOLT AB1, (SEE DETAIL, SHT 14), GALV
4	4	4	4	4	ANCHOR ROD AR1, (SEE DETAIL, SHT 14), GALV
1	1	1	1	1	PILE PLATE PP4, (SEE DETAIL, SHT 14)

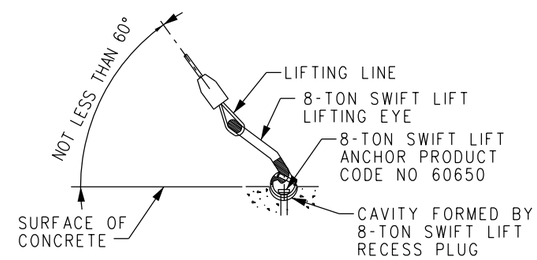

8-TON SWIFT LIFT RECESS PLUGS, ANCHORS AND LIFTING EYES ARE AVAILABLE FROM DAYTON RICHMOND CORP., 9415 SORENSON AVE., SANTA FE SPRINGS, CALIFORNIA 90670, TELEPHONE (714) 522-3442. THE MATERIALS FOR THIS LIFTING SYSTEM ARE NOT INCLUDED IN THE BILL OF MATERIAL BUT ARE TO BE ORDERED AS REQUIRED.

LIFTING DETAIL

SCALE: NONE

NOTES:

1. ALL CONCRETE, CONCRETE WORK AND PLACEMENT OF REINFORCEMENT SHALL BE IN ACCORDANCE WITH SCRRA STANDARD SPECIFICATIONS.
2. THE PORTION OF PILE PLATE PP4 IN CONTACT WITH CONCRETE SHALL BE CLEANED OF ALL DIRT, OIL AND GREASE AND ALL LOOSE SCALE AND RUST BEFORE CONCRETE IS PLACED.
3. THE ULTIMATE COMPRESSIVE STRENGTH OF CONCRETE SHALL NOT BE LESS THAN 4000 PSI IN 28 DAYS. MAXIMUM SIZE OF COARSE AGGREGATE SHALL BE ONE INCH.
4. MINIMUM CONCRETE COVER ON REINFORCEMENT SHALL BE TWO INCHES.
5. ALL EXPOSED EDGES OF CONCRETE MEMBERS SHALL BE CHAMFERED ¾".
6. CONCRETE MEMBERS SHALL NOT BE REMOVED FROM THE CASTING BED BEFORE THE CONCRETE REACHES A STRENGTH OF 2000 PSI.
7. "D" = DEPTH OF SLAB BEAM.
8. ANCHOR ROD AR1 MUST BE PLACED WITHIN ¼" OF PLAN LOCATION OR BEAMS WILL NOT FIT.

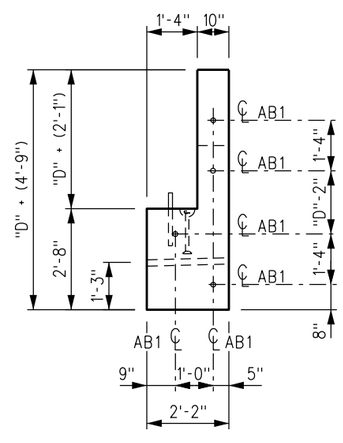

TYPICAL SIDE ELEVATION

SCALE: ½"=1'-0"

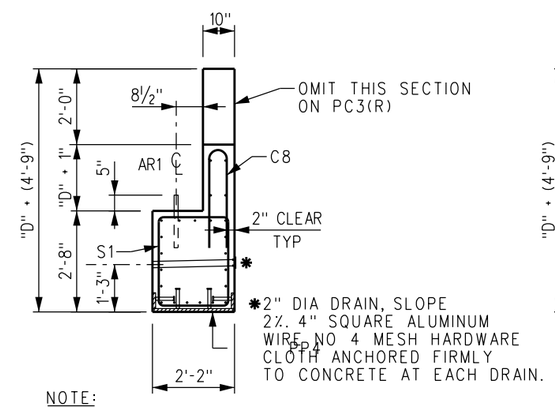

NOTE:
SEE SECTION B FOR BAR DESIGNATIONS NOT SHOWN.

SECTION A

SCALE: ½"=1'-0"

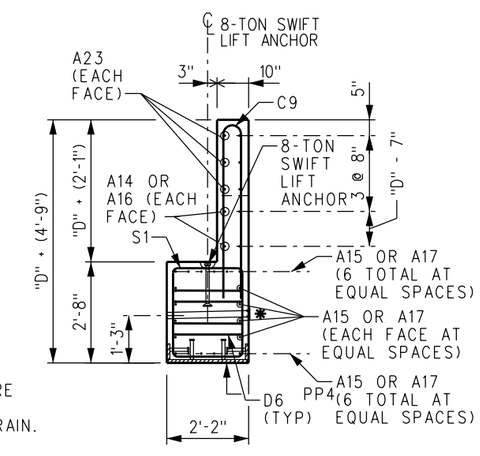

SECTION B

SCALE: ½"=1'-0"

REV.	DATE	DESCRIPTION	DES.	ENG.
X	XX-XX-XX	REVISION	XX	XX

DRAWN BY: A. CARLOS DATE: 03/31/2011

ASSISTANT DIRECTOR: STANDARDS & DESIGN

DIRECTOR OF ENGINEERING AND CONSTRUCTION

METROLINK®
SOUTHERN CALIFORNIA REGIONAL RAIL AUTHORITY
ONE GATEWAY PLAZA, 12TH FLOOR, L. A., CA. 90012

ENGINEERING STANDARDS

PRECAST CONCRETE MEMBERS (1 OF 2)
PRECAST/PRESTRESSED CONCRETE
SLAB BEAM BRIDGES

STANDARD 6002
SCALE: AS NOTED
REVISION –
SHEET 11 OF 22
CADD FILE: ES6002-11

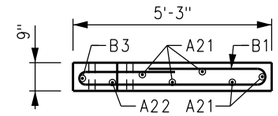

SECTION D

SCALE: 1½"=1'-0

PRECAST WING WALL PW1		
"D"	VOLUME OF CONCRETE	ESTIMATED WEIGHT
12"	0.76 CY	1.5 TONS
14"	0.78 CY	1.6 TONS
16"	0.81 CY	1.6 TONS
18"	0.83 CY	1.7 TONS
20"	0.85 CY	1.7 TONS

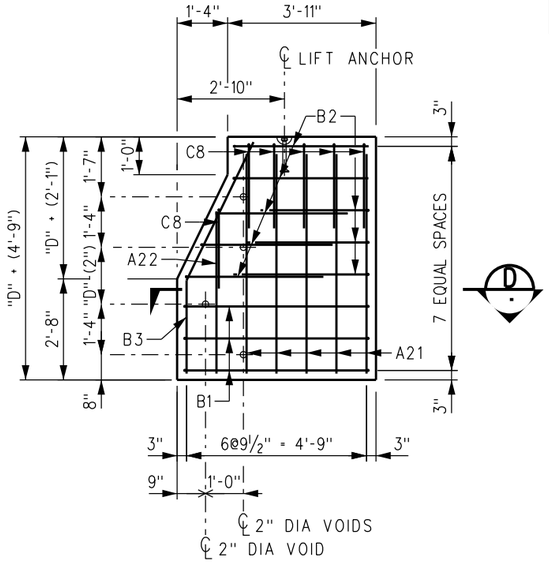

PRECAST WING WALL PW1

SCALE: ½" = 1'-0"
ESTIMATED LIFTING WEIGHT: SEE TABLE
REQUIRED VOLUME OF CONCRETE: SEE TABLE
WEIGHT OF REINFORCING STEEL = 127 LBS

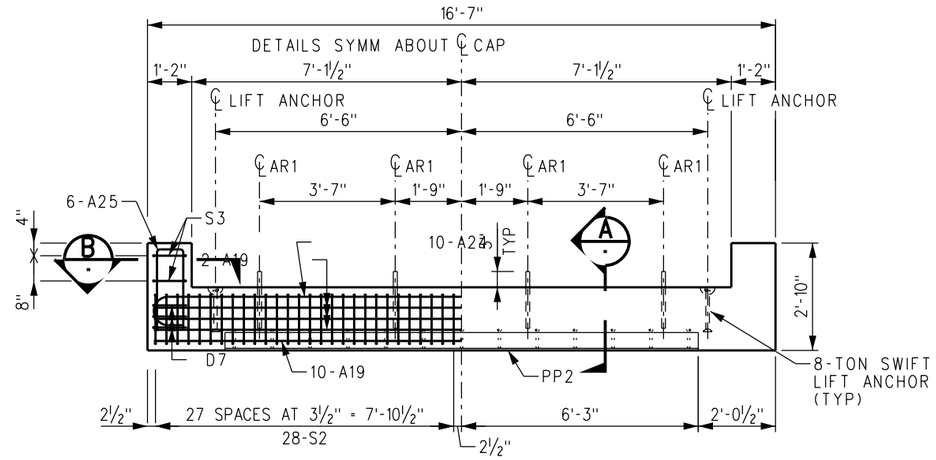

PRECAST CAP PC4

SCALE: ½" = 1'-0"
ESTIMATED LIFTING WEIGHT = 6.5 TONS
REQUIRED VOLUME OF CONCRETE = 2.9 CY
WEIGHT OF REINFORCING STEEL = 934 LBS

REINFORCING SCHEDULE

REQUIRED PER PRECAST CAP			DESCRIPTION
PC4	PC4B	PW1	
16	-	-	BAR A19, #5 x 16'-3" (STRAIGHT)
-	16	-	BAR A20, #5 x 15'-0" (STRAIGHT)
-	-	5	BAR A21, #4 x 5'-3" (STRAIGHT)
-	-	1	BAR A22, #4 x 3'-10" (STRAIGHT)
10	-	-	BAR A24, #5 x 18'-11" (SEE DETAIL, SHT 15)
12	6	-	BAR A25, #6 x 5'-8" (SEE DETAIL, SHT 15)
-	10	-	BAR A26, #5 x 17'-8" (SEE DETAIL, SHT 15)
-	-	3	BAR B1, #5 x 12'-10" (SEE DETAIL, SHT 15)
-	-	8	BAR B2, #4 x 7'-7" (SEE DETAIL, SHT 15)
-	-	1	BAR B3, #4 x 5'-2" (SEE DETAIL, SHT 15)
-	-	6	BAR C8, #4 x 5'-6" (SEE DETAIL, SHT 15)
6	6	-	BAR D7, #4 x 3'-9" (SEE DETAIL, SHT 15)
56	52	-	BAR S2, #4 x 8'-6" (SEE DETAIL, SHT 15)
4	2	-	BAR S3, #5 x 7'-2" (SEE DETAIL, SHT 15)

MISCELLANEOUS STEEL SCHEDULE

REQUIRED PER PRECAST CAP			DESCRIPTION
PC4	PC4B	PW1	
8	8	-	ANCHOR ROD AR1, (SEE DETAIL, SHT 14) GALV
1	1	-	PILE PLATE PP2, (SEE DETAIL, SHT 14)

NOTES:

1. ALL CONCRETE, CONCRETE WORK AND PLACEMENT OF REINFORCEMENT SHALL BE IN ACCORDANCE WITH SCRRA STANDARD SPECIFICATIONS.
2. THE PORTION OF PILE PLATE PP2 IN CONTACT WITH CONCRETE SHALL BE CLEANED OF ALL DIRT, OIL AND GREASE AND ALL LOOSE SCALE AND RUST BEFORE CONCRETE IS PLACED.
3. THE ULTIMATE COMPRESSIVE STRENGTH OF CONCRETE SHALL BE NOT LESS THAN 4000 PSI IN 28 DAYS. MAXIMUM SIZE OF COARSE AGGREGATE SHALL BE ONE INCH.
4. MINIMUM CONCRETE COVER ON REINFORCEMENT SHALL BE TWO INCHES.
5. ALL EXPOSED EDGES OF CONCRETE MEMBERS SHALL BE CHAMFERED ¾". CONCRETE MEMBERS SHALL NOT BE REMOVED FROM THE CASTING BED
6. BEFORE THE CONCRETE REACHES A STRENGTH OF 2000 PSI. "D" = DEPTH OF SLAB BEAM. ANCHOR ROD AR1 MUST BE PLACED WITHIN ¼" OF PLAN LOCATION OR BEAMS WILL NOT FIT.
7.

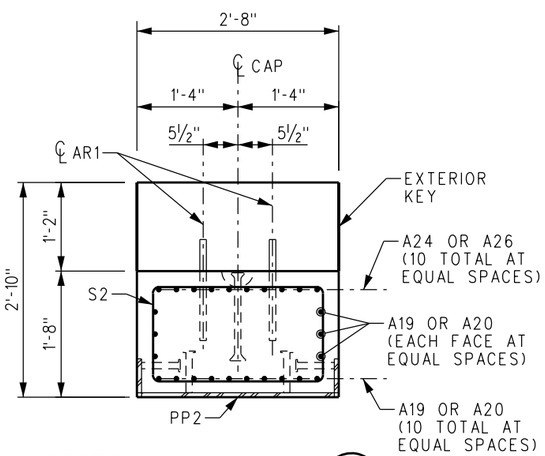

SECTION A

SCALE: 1"=1'-0

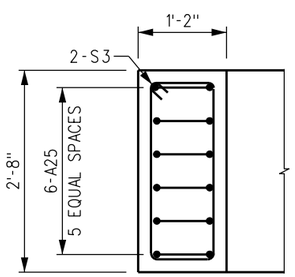

SECTION B

SCALE: 1"=1'-0

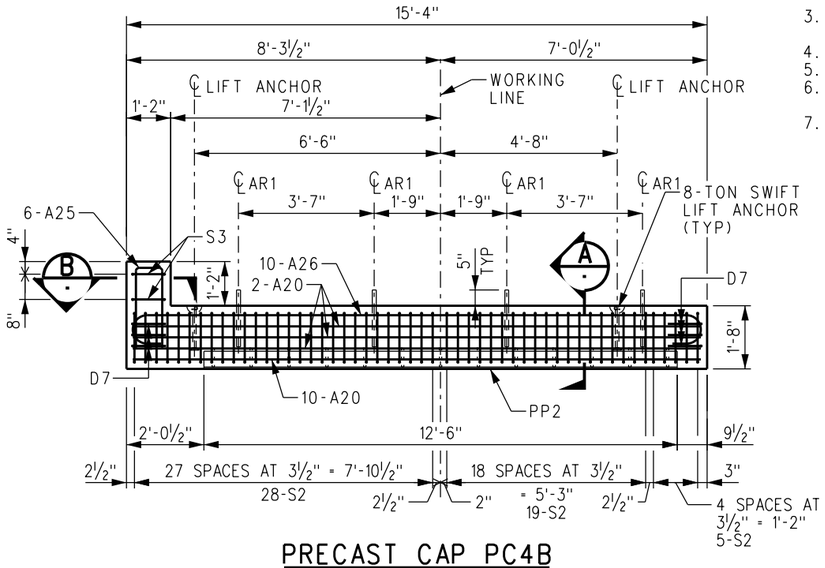

PRECAST CAP PC4B

SCALE: ½" = 1'-0"
ESTIMATED LIFTING WEIGHT = 5.8 TONS
REQUIRED VOLUME OF CONCRETE = 2.6 CY
WEIGHT OF REINFORCING STEEL = 811 LBS

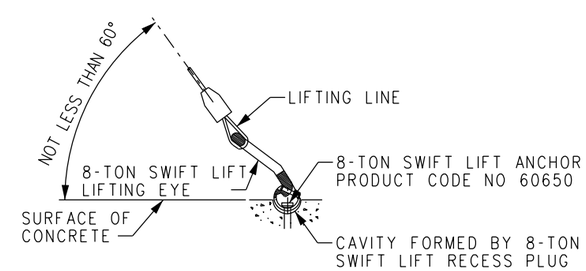

8-TON SWIFT LIFT RECESS PLUGS, ANCHORS AND LIFTING EYES ARE AVAILABLE FROM DAYTON RICHMOND CORP., 9415 SORENSON AVE., SANTA FE SPRINGS, CALIFORNIA 90670, TELEPHONE (714) 522-3442. THE MATERIALS FOR THIS LIFTING SYSTEM ARE NOT INCLUDED IN THE BILL OF MATERIAL BUT ARE TO BE ORDERED AS REQUIRED.

LIFTING DETAIL

SCALE: NONE

REV.	DATE	DESCRIPTION	DES.	ENG.
X	XX-XX-XX	REVISION	XX	XX

DRAWN BY: A. CARLOS DATE: 03/31/2011

ASSISTANT DIRECTOR: STANDARDS & DESIGN

DIRECTOR OF ENGINEERING AND CONSTRUCTION

METROLINK
SOUTHERN CALIFORNIA REGIONAL RAIL AUTHORITY
ONE GATEWAY PLAZA, 12TH FLOOR, L. A., CA. 90012

ENGINEERING STANDARDS

PRECAST CONCRETE MEMBERS (2 OF 2)
PRECAST/PRESTRESSED CONCRETE
SLAB BEAM BRIDGES

STANDARD 6002
SCALE: AS NOTED
REVISION –
SHEET 12 OF 22
CADD FILE: ES6002-12

DP11 LENGTHS FOR PB11.92 - PB19.92				
BEAM MARK	WEIGHT	"P"	"Q"	"R"
PB11.92	111 LBS	11'-11½"	11'-4"	4'-0"
PB13.92	129 LBS	13'-11½"	13'-4"	5'-0"
PB15.92	147 LBS	15'-11½"	15'-4"	6'-0"
PB17.92	165 LBS	17'-11½"	17'-4"	7'-0"
PB19.92	182 LBS	19'-11½"	19'-4"	8'-0"

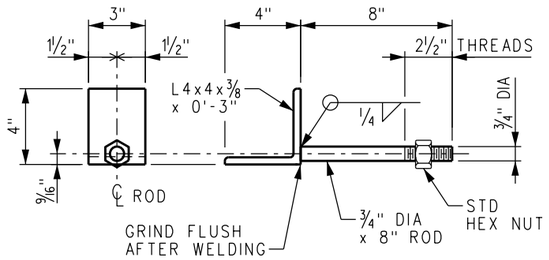

CURB ANGLE CA3

SCALE: 3" = 1'-0"
WEIGHT = 3.6 LBS
GALVANIZE AFTER FABRICATION

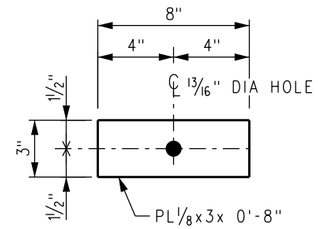

CURB PLATE CP2

SCALE: 3" = 1'-0"
WEIGHT = 1.0 LBS
GALVANIZE AFTER FABRICATION

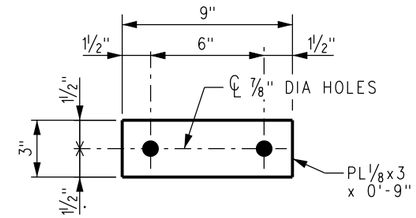

CURB PLATE CP3

SCALE: 3" = 1'-0"
WEIGHT = 2.9 LBS
GALVANIZE AFTER FABRICATION

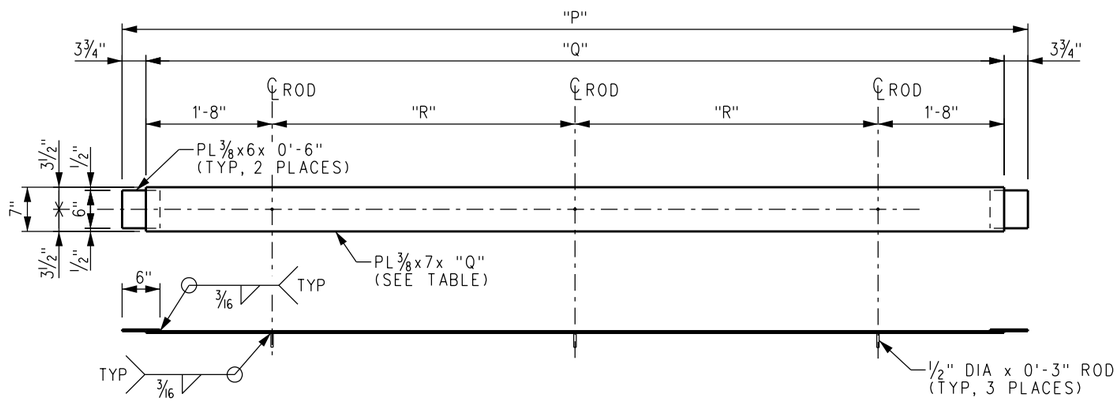

DECK PLATE DP11

SCALE: 1" = 1'-0"
WEIGHT: SEE TABLE
GALVANIZE AFTER FABRICATION

MATERIAL NOTES:

1. STRUCTURAL STEEL BARS, STEEL PLATES AND ANGLES SHALL MEET THE REQUIREMENTS OF THE CURRENT ASTM DESIGNATION: A36.
2. SHEAR CONNECTOR STUDS SHALL MEET THE REQUIREMENTS OF SECTION 7 OF THE CURRENT AWS STRUCTURAL WELDING CODE D1.1 FOR GRADE 1020 SOLID FLUX FILLED HEADED STUDS.

SHOP NOTES:

1. FABRICATION AND ARC WELDING OF STRUCTURAL STEEL SHALL BE IN ACCORDANCE WITH SCRRA STANDARD SPECIFICATIONS.
2. GRIND EXPOSED WELDS SMOOTH.
3. OPEN HOLES: AS NOTED. - SHOP PAINT: NONE.
4. SHEAR CONNECTOR STUDS SHALL BE AUTOMATICALLY END WELDED WITH COMPLETE FUSION IN ACCORDANCE WITH APPENDIX VI OF THE CURRENT AWS STRUCTURAL WELDING CODE D1.1.
5. GALVANIZING: AB1, AR1, CONDUIT BRACKET, SIDEWALK BRACKET, CA3, CP2, CP3, DP11, DP12, DP13 AND W1 SHALL BE GALVANIZED AFTER FABRICATION IN ACCORDANCE WITH THE CURRENT ASTM DESIGNATION: A123 AND A153 AS APPLICABLE. AFTER GALVANIZING, ALL ELEMENTS SHALL BE FREE OF ABRASIONS, ROUGH OR SHARP EDGES, AND OTHER SURFACE DEFECTS.
6. NUTS SHALL BE TAPPED OVERSIZE TO FIT GALVANIZED THREADS AND BRUSHED AFTER GALVANIZING TO PERMIT ROTATION ON THE THREADED ROD.
7. AB1 AND CA3 SHALL BE SHIPPED WITH THE NUT ON THE THREADED ROD.

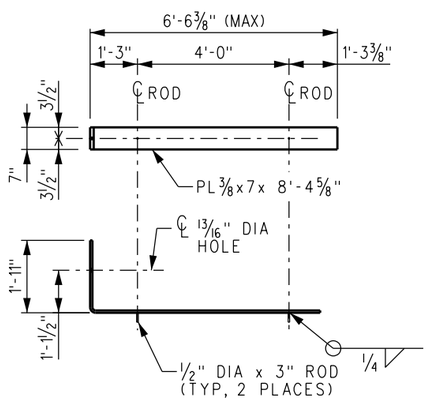

DECK PLATE DP12

SCALE: ½" = 1'-0"
WEIGHT = 75.2 LBS
GALVANIZE AFTER FABRICATION

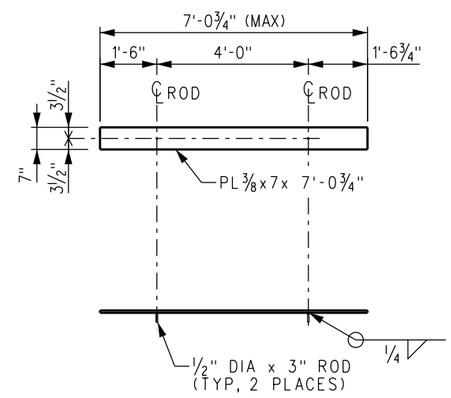

DECK PLATE DP13

SCALE: ½" = 1'-0"
WEIGHT = 63.4 LBS
GALVANIZE AFTER FABRICATION

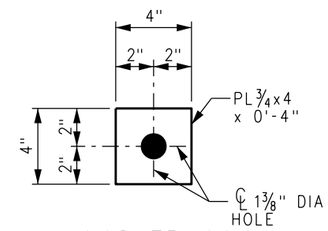

WASHER W1

SCALE: 3" = 1'-0"
WEIGHT = 3.4 LBS
GALVANIZE AFTER FABRICATION

REV.	DATE	DESCRIPTION	DES.	ENG.
X	XX-XX-XX	REVISION	XX	XX

DRAWN BY: A. CARLOS DATE: 03/31/2011

ASSISTANT DIRECTOR: STANDARDS & DESIGN

DIRECTOR OF ENGINEERING AND CONSTRUCTION

METROLINK®
SOUTHERN CALIFORNIA REGIONAL RAIL AUTHORITY
ONE GATEWAY PLAZA, 12TH FLOOR, L. A., CA. 90012

ENGINEERING STANDARDS

STEEL DETAILS (1 OF 2)
PRECAST/PRESTRESSED CONCRETE
SLAB BEAM BRIDGES

STANDARD 6002
SCALE: AS NOTED
REVISION –
SHEET 13 OF 22
CADD FILE: ES6002-13

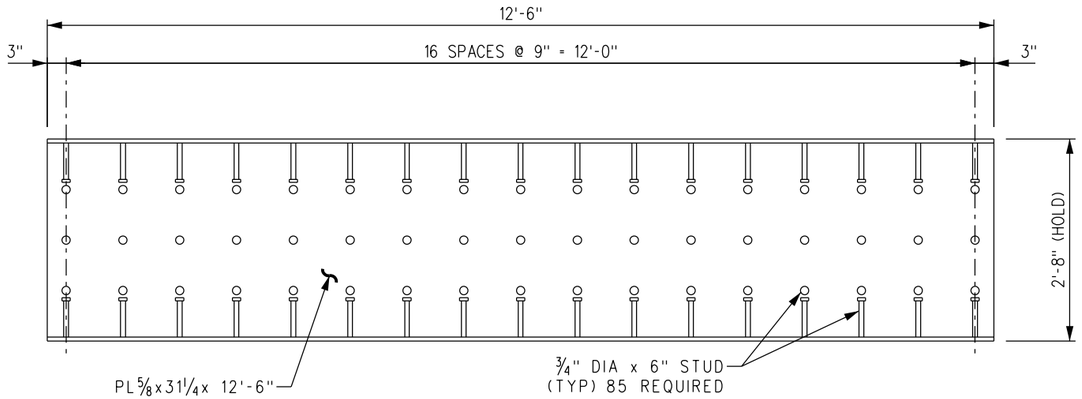

PILE PLATE PP2

SCALE: 1" = 1'-0"
WEIGHT = 1170 LBS

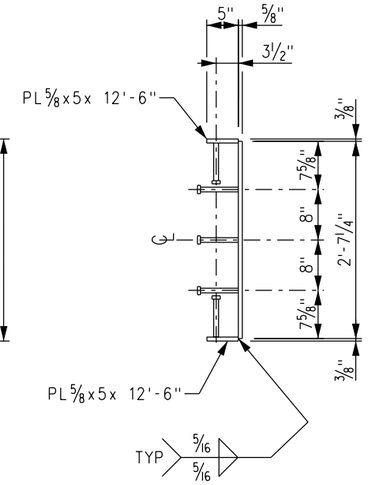

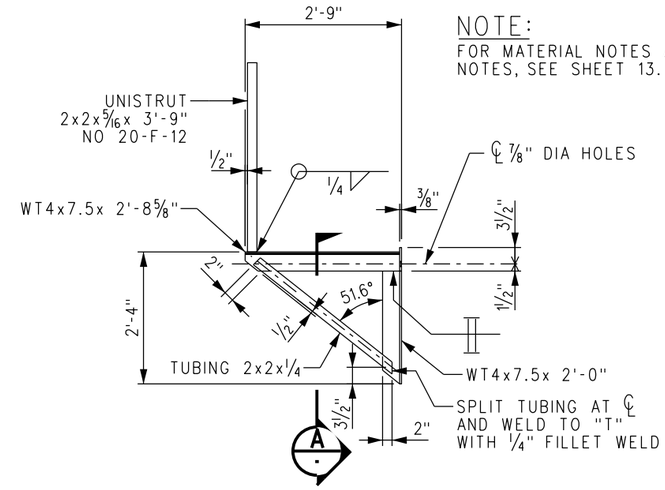

NOTE:
FOR MATERIAL NOTES AND SHOP NOTES, SEE SHEET 13.

STANDARD SIDEWALK BRACKET

SCALE: 3/4" = 1'-0"
WEIGHT = 66 LBS
GALVANIZE AFTER FABRICATION

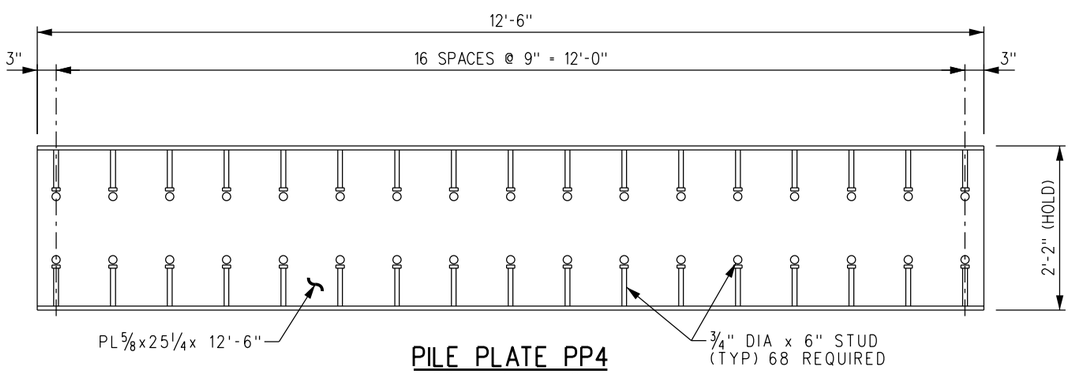

PILE PLATE PP4

SCALE: 1" = 1'-0"
WEIGHT = 996 LBS

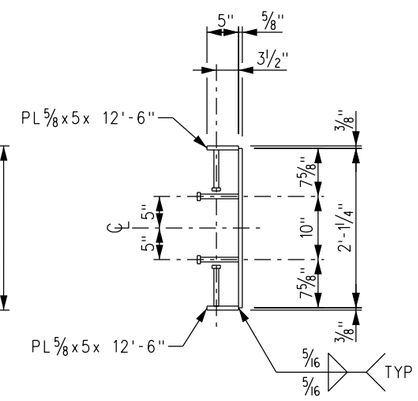

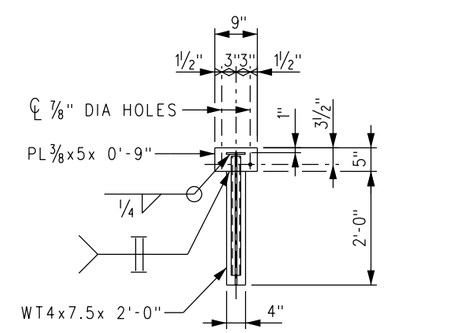

SECTION

SCALE: 3/4"=1'-0

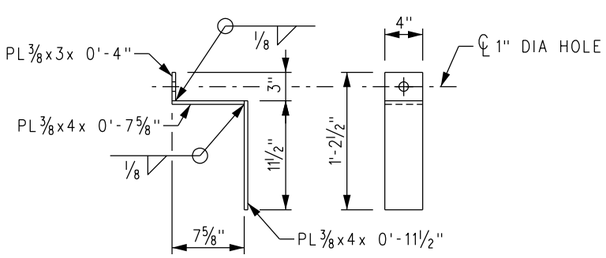

CONDUIT BRACKET

SCALE: 1 1/2" = 1'-0"
WEIGHT = 9.4 LBS
GALVANIZE AFTER FABRICATION

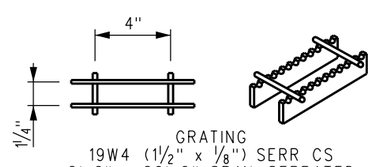

GRATING
19W4 (1 1/2" x 1/8") SERR CS
2'-6" x 20'-0" SPAN, SERRATED
TRIMMED, GALVANIZED

DETAIL 12

SCALE: 3"=1'-0

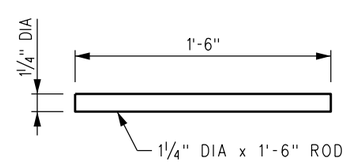

ANCHOR ROD AR1

SCALE: 1 1/2" = 1'-0"
WEIGHT = 6.3 LBS
GALVANIZE AFTER FABRICATION

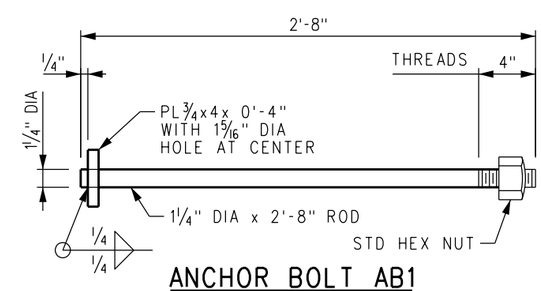

ANCHOR BOLT AB1

SCALE: 1 1/2" = 1'-0"
WEIGHT = 14.5 LBS
GALVANIZE AFTER FABRICATION

REV.	DATE	DESCRIPTION	DES.	ENG.
X	XX-XX-XX	REVISION	XX	XX

DRAWN BY: A. CARLOS DATE: 03/31/2011

ASSISTANT DIRECTOR: STANDARDS & DESIGN

DIRECTOR OF ENGINEERING AND CONSTRUCTION

METROLINK
SOUTHERN CALIFORNIA REGIONAL RAIL AUTHORITY
ONE GATEWAY PLAZA, 12TH FLOOR, L. A., CA. 90012

ENGINEERING STANDARDS

STEEL DETAILS (2 OF 2)
PRECAST/PRESTRESSED CONCRETE
SLAB BEAM BRIDGES

STANDARD 6002
SCALE: AS NOTED
REVISION –
SHEET 14 OF 22
CADD FILE: ES6002-14

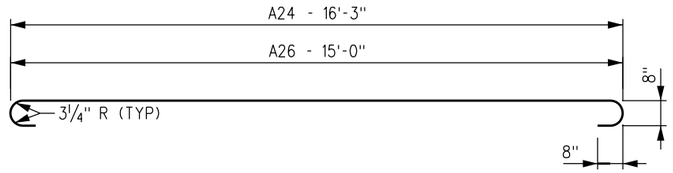

BARS A24 & A26

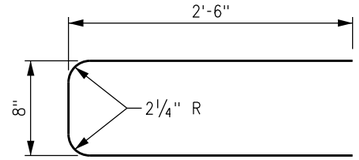

BAR A25

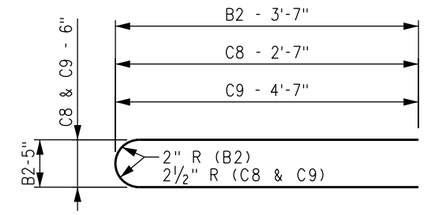

BARS B2, C8 & C9

BENT BAR SCHEDULE	
MARK	DESCRIPTION
A24	•5 x 18'-11"
A25	•6 x 5'-8"
A26	•5 x 17'-8"
B1	•5 x 12'-10"
B2	•4 x 7'-7"
B3	•4 x 5'-2"
C8	•4 x 5'-8"
C9	•4 x 9'-8"
D1	•4 x 3'-8"
D2	•4 x 7'-2"
D6	•4 x 3'-3"
D7	•4 x 3'-9"
S1	•4 x 9'-6"
S2	•4 x 8'-6"
S3	•5 x 7'-2"
U1	•4 x 17'-4"
U2	•4 x 18'-8"
U3	•4 x 20'-8"

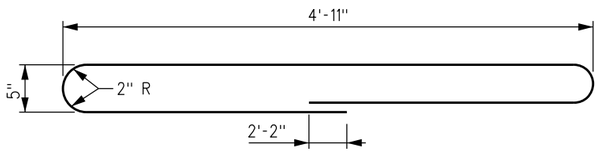

BAR B1

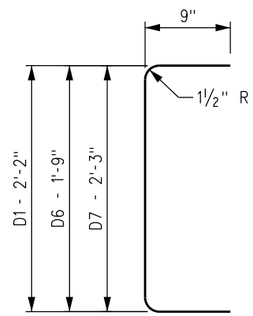

BARS D1, D6 & D7

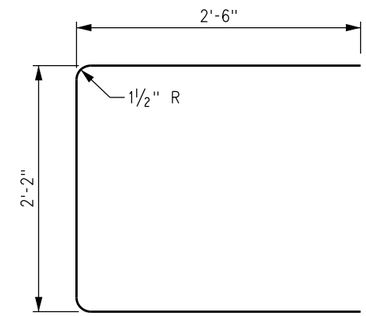

BAR D2

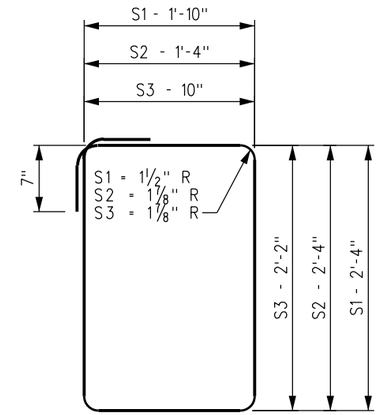

BARS S1, S2 & S3

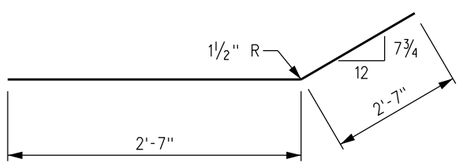

BAR B3

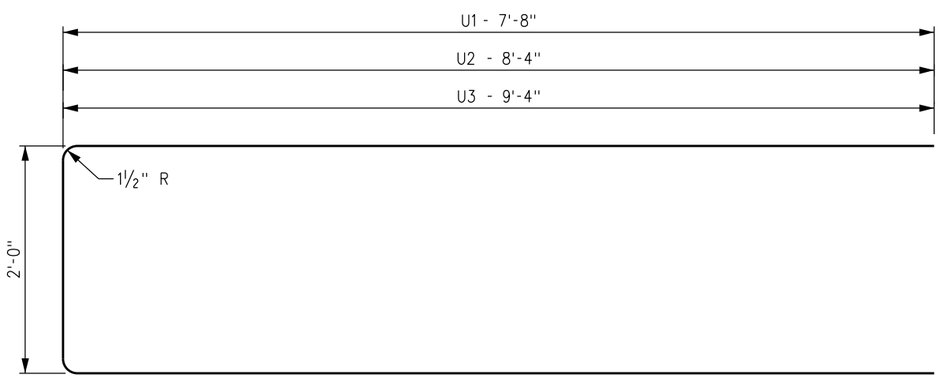

BARS U1, U2 & U3

NOTES:

1. ALL DIMENSIONS SHOWN ARE OUT TO OUT OF BARS.
2. BARS TO BE BENT PER RADIUS SHOWN.
3. MILD STEEL REINFORCEMENT SHALL MEET THE REQUIREMENTS OF THE CURRENT ASTM DESIGNATION: A615, GRADE 60 OR A706.
4. FABRICATION OF REINFORCEMENT SHALL BE IN ACCORDANCE WITH CHAPTER 7 OF THE CURRENT CSRI MANUAL OF STANDARD PRACTICE.

REV.	DATE	DESCRIPTION	DES.	ENG.
X	XX-XX-XX	REVISION	XX	XX

DRAWN BY: A. CARLOS DATE: 03/31/2011

ASSISTANT DIRECTOR: STANDARDS & DESIGN

DIRECTOR OF ENGINEERING AND CONSTRUCTION

METROLINK®
SOUTHERN CALIFORNIA REGIONAL RAIL AUTHORITY
ONE GATEWAY PLAZA, 12TH FLOOR, L. A., CA. 90012

ENGINEERING STANDARDS

REINFORCING STEEL DETAILS
PRECAST/PRESTRESSED CONCRETE
SLAB BEAM BRIDGES

STANDARD 6002
SCALE: 1½" = 1'-0"
REVISION –
SHEET 15 OF 22
CADD FILE: ES6002-15

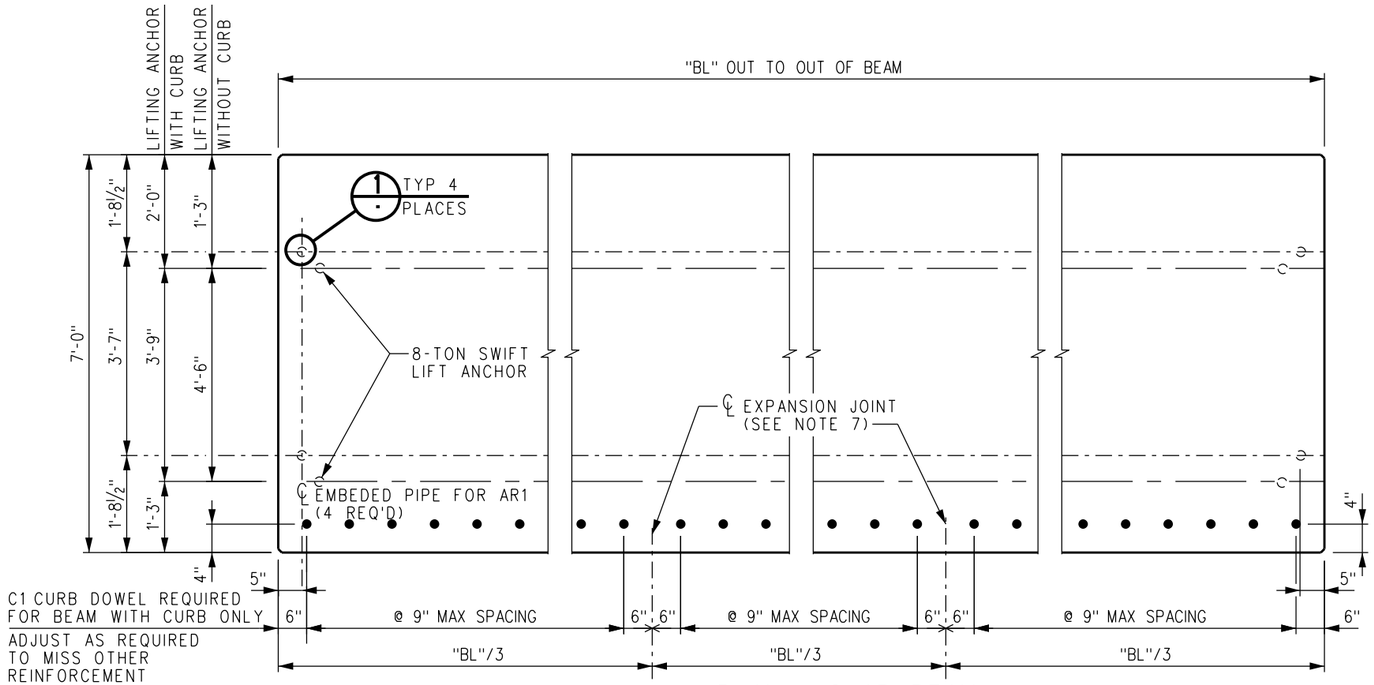

PLAN - SLAB BEAM

SCALE: ¾" 1'-0"

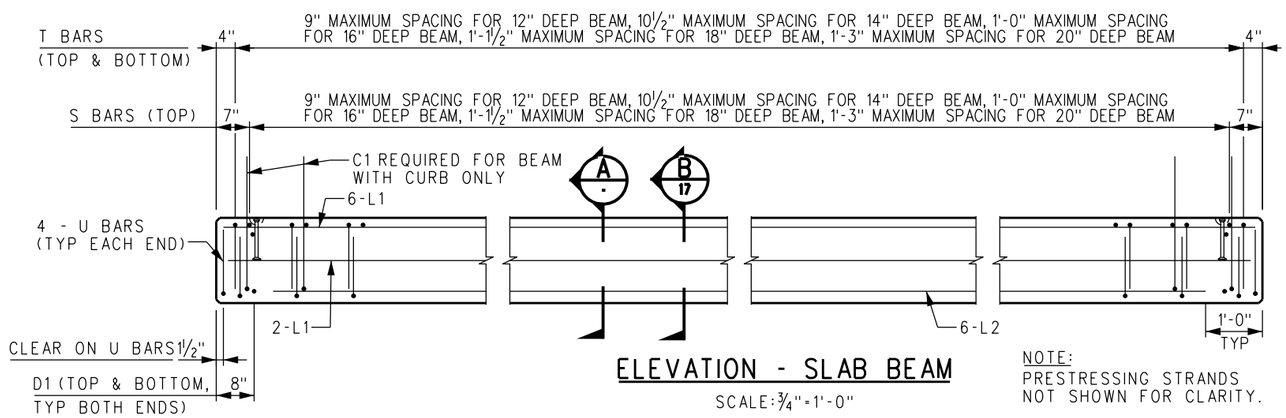

ELEVATION - SLAB BEAM

SCALE: ¾"=1'-0"

NOTE:
PRESTRESSING STRANDS NOT SHOWN FOR CLARITY.

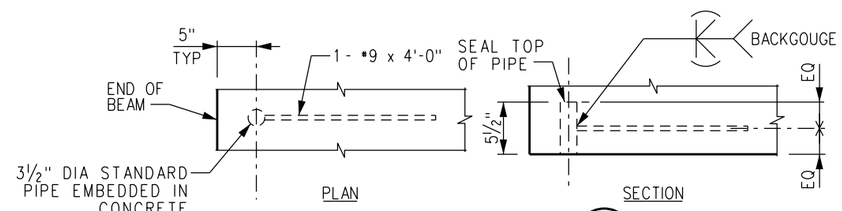

DETAIL 1

SCALE: NONE

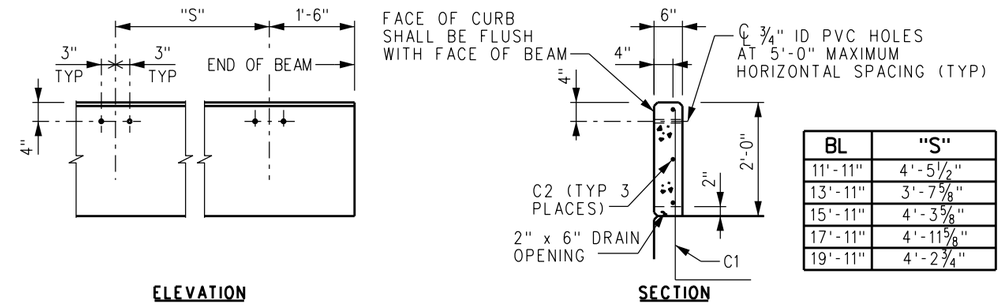

BL	"S"
11'-11"	4'-5½"
13'-11"	3'-7⅝"
15'-11"	4'-3⅝"
17'-11"	4'-11⅝"
19'-11"	4'-2¾"

DETAIL 2

SCALE: ¾"=1'-0

CURB DETAIL

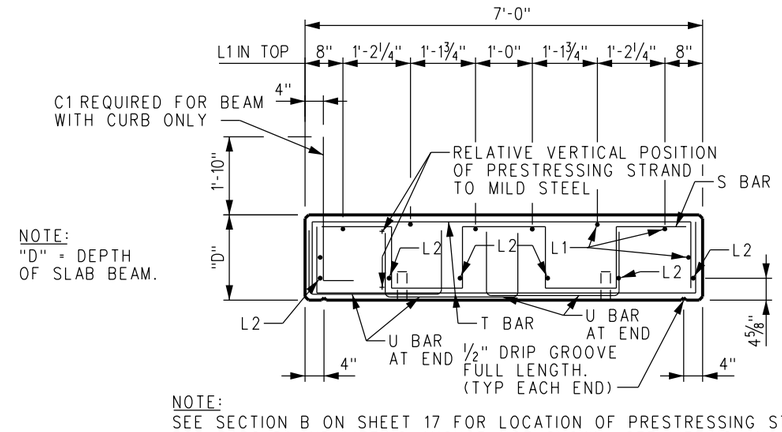

NOTE:
"D" = DEPTH OF SLAB BEAM.

NOTE:
SEE SECTION B ON SHEET 17 FOR LOCATION OF PRESTRESSING STRANDS. FOR BARS D1 AND LIFTING ANCHOR NOT SHOWN, SEE LIFTING ANCHOR DETAIL.

SECTION A

SCALE: ¾"=1'-0

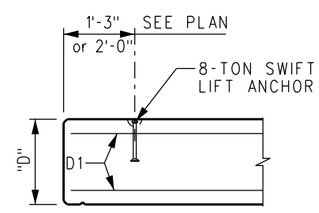

LIFTING ANCHOR DETAIL

SCALE: ¾"=1'-0"

NOTES:

1. AN ALTERNATE STRAND PATTERN BETTER SUITED TO THE FABRICATOR'S FACILITIES THAT HAS THE SAME ECCENTRICITY AS THE PATTERN SHOWN ON THIS PLAN WILL BE CONSIDERED FOR APPROVAL UPON SUBMISSION BY THE MANUFACTURER OF COMPUTATIONS WITH THE DETAIL DRAWINGS.
2. TACK WELDING OF REINFORCEMENT IS PROHIBITED.
3. IF REINFORCING BAR SUPPORTS ARE USED, THEY SHALL BE CLASS 1, PLASTIC PROTECTED, IN ACCORDANCE WITH CHAPTER 3 OF THE CURRENT CRSI MANUAL OF STANDARD PRACTICE.
4. MANUFACTURER SHALL BURN BACK PRESTRESSING STRANDS TO A DEPTH OF ONE INCH BELOW SURFACE OF CONCRETE ON ENDS OF BEAM. RESULTING RECESSES SHALL BE FILLED WITH EPOXY GROUT.
5. ALL CONCRETE FORMS SHALL BE FILLETED ¾" INCHES AT CORNERS AND EDGES.
6. CURB TO BE CAST ON PRESTRESSED BEAM AFTER STRANDS ARE DETENSIONED. BOND NEW CONCRETE TO PRESTRESSED BEAM BY COATING CONTACT AREA WITH SIKADUR HI-MOD, MADE BY SIKA CHEMICAL CORP., OR EQUAL. FRESH CONCRETE MUST BE PLACED WHILE BOND COAT IS STILL TACKY.
7. PREFORMED ½" x 6" ASPHALT EXPANSION BOARD TO BE PLACED AS TO DIVIDE CURB INTO THREE EQUAL SEGMENTS LEAVING ½" JOINTS. A 2" x 6" DRAIN OPENING SHALL BE FORMED AT THE CENTER OF EACH EXPANSION JOINT.
8. ALL STEEL TO HAVE A MINIMUM OF 1½" OF CONCRETE COVER. ALL CORNERS TO BE CHAMFERED ¾" OR TOOLED TO A RADIUS. TOP OF BEAM TO BE GIVEN A STEEL TROWEL FINISH.

REV.	DATE	DESCRIPTION	DES.	ENG.
X	XX-XX-XX	REVISION	XX	XX

DRAWN BY: A. CARLOS DATE: 03/31/2011

ASSISTANT DIRECTOR: STANDARDS & DESIGN

DIRECTOR OF ENGINEERING AND CONSTRUCTION

METROLINK®
SOUTHERN CALIFORNIA REGIONAL RAIL AUTHORITY
ONE GATEWAY PLAZA, 12TH FLOOR, L. A., CA. 90012

ENGINEERING STANDARDS

12", 14", 16", 18" AND 20" PRECAST/PRESTRESSED CONCRETE SLAB BEAMS (1 OF 3)
PRECAST/PRESTRESSED CONCRETE SLAB BEAM BRIDGES

STANDARD 6002
SCALE: AS NOTED
REVISION –
SHEET 16 OF 22
CADD FILE: ES6002-16

f'ci = 4500 psi
f'c = 6000 psi

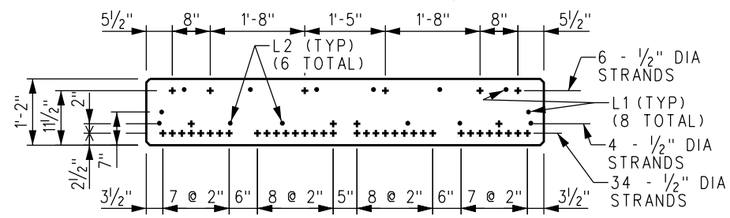

SECTION B/16

14" SLAB BEAM, "BL" = 12'-0", 44 STRANDS

f'ci = 4000 psi
f'c = 6000 psi

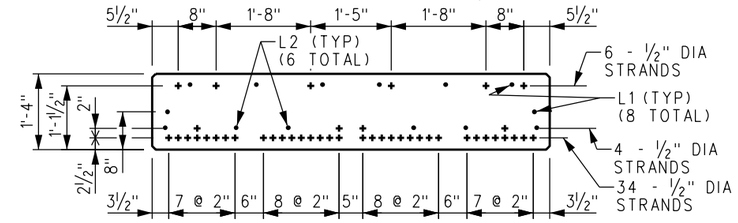

SECTION B/16

16" SLAB BEAM, "BL" = 14'-0", 44 STRANDS

f'ci = 5500 psi
f'c = 10000 psi

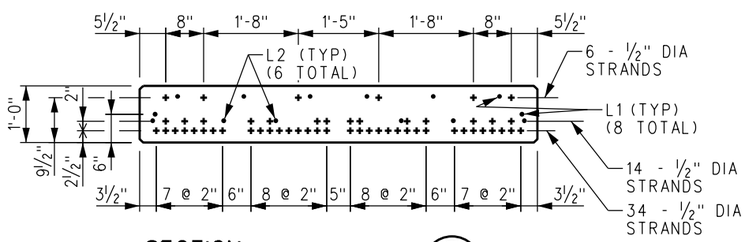

SECTION B/16
(PB11.92 AND PB11.92-C)

12" SLAB BEAM, 11'-6" < "BL" ≤ 12'-0", 54 STRANDS

f'ci = 5500 psi
f'c = 8000 psi

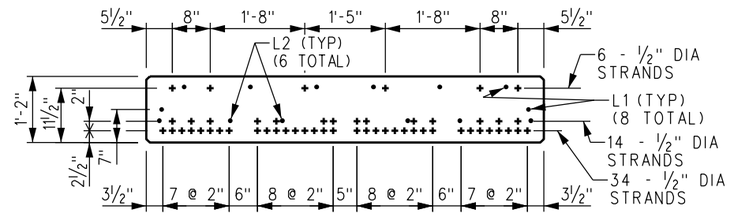

SECTION B/16
(PB13.92 AND PB13.92-C)

14" SLAB BEAM, 12'-0" < "BL" ≤ 14'-0", 54 STRANDS

f'ci = 4500 psi
f'c = 6000 psi

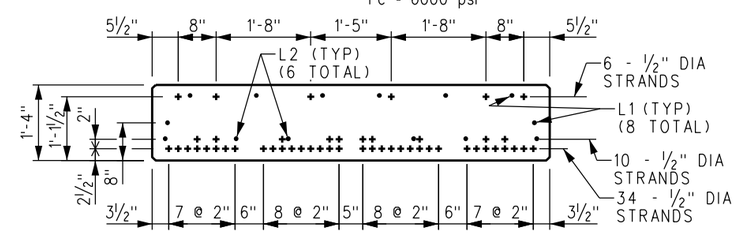

SECTION B/16
(PB15.92 AND PB15.92-C)

16" SLAB BEAM, 14'-0" < "BL" ≤ 16'-0", 50 STRANDS

QUANTITIES FOR STANDARD BEAMS				
NUMBER	"D"	"BL"	REQUIRED VOLUME OF CONCRETE	WEIGHT OF MILD STEEL REINFORCING
PB11.92	12"	11'-11"	3.1 CY	593 LBS
PB11.92-C	12"	11'-11"	3.5 CY	680 LBS
PB13.92	14"	13'-11"	4.2 CY	640 LBS
PB13.92-C	14"	13'-11"	4.7 CY	744 LBS
PB15.92	16"	15'-11"	5.5 CY	688 LBS
PB15.92-C	16"	15'-11"	6.1 CY	808 LBS
PB17.92	18"	17'-11"	7.0 CY	735 LBS
PB17.92-C	18"	17'-11"	7.6 CY	868 LBS
PB19.92	20"	19'-11"	8.6 CY	782 LBS
PB19.92-C	20"	19'-11"	9.3 CY	932 LBS

f'ci = 6000 psi
f'c = 9000 psi

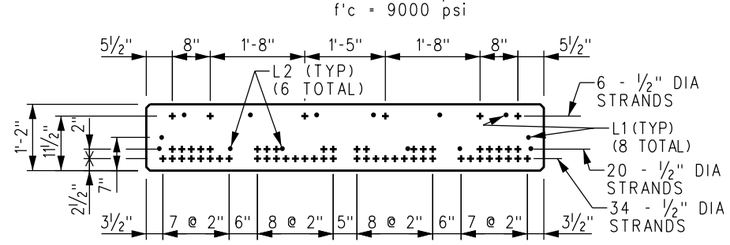

SECTION B/16

14" SLAB BEAM, 14'-0" < "BL" ≤ 16'-0", 60 STRANDS

f'ci = 5000 psi
f'c = 7000 psi

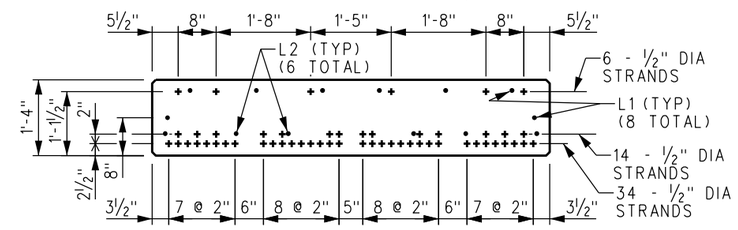

SECTION B/16

16" SLAB BEAM, 16'-0" < "BL" ≤ 18'-0", 54 STRANDS

REV.	DATE	DESCRIPTION	DES.	ENG.
X	XX-XX-XX	REVISION	XX	XX

DRAWN BY: HDR DATE: 03/31/2011

ASSISTANT DIRECTOR: STANDARDS & DESIGN

DIRECTOR OF ENGINEERING AND CONSTRUCTION

METROLINK
SOUTHERN CALIFORNIA REGIONAL RAIL AUTHORITY
ONE GATEWAY PLAZA, 12TH FLOOR, L. A., CA. 90012

ENGINEERING STANDARDS

12", 14", 16", 18" AND 20" PRECAST/PRESTRESSED CONCRETE SLAB BEAMS (2 OF 3)
PRECAST/PRESTRESSED CONCRETE SLAB BEAM BRIDGES

STANDARD 6002
SCALE: ¾" = 1'-0"
REVISION –
SHEET 17 OF 22
CADD FILE: ES6002-17

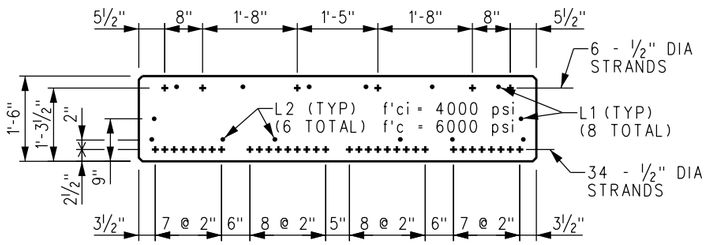

SECTION B/16
SCALE: ¾"=1'-0
18" SLAB BEAM, "BL" = 16'-0", 40 STRANDS

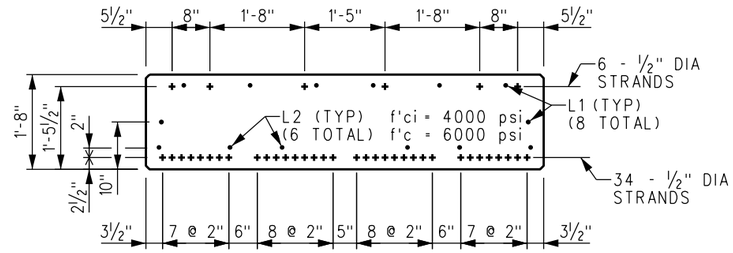

SECTION B/16
SCALE: ¾"=1'-0
20" SLAB BEAM, "BL" = 18'-0", 40 STRANDS

NOTES:

1. ALL BAR DIMENSIONS ARE OUT TO OUT OF BARS. BEND #4 BARS AROUND 3" DIA PIN, #5 BARS AROUND 3¾" DIA PIN AND #6 BARS AROUND 4½" DIA PIN.
2. BARS S12, T12 AND U12 ARE FOR 12" DEEP BEAM. BARS S14, T14 AND U14 ARE FOR 14" DEEP BEAM. BARS S16, T16 AND U16 ARE FOR 16" DEEP BEAM. BARS S18, T18 AND U18 ARE FOR 18" DEEP BEAM. BARS S20, T20 AND U20 ARE FOR 20" DEEP BEAM.
3. "F" = "BL" - 5"
   "G" = ("BL" - 15")/3
   "H" = "BL" - 24"

BAR SCHEDULE	
MARK	DESCRIPTION
C1	#5 x 4'-0"
C2 (STRAIGHT)	#4 x "G"
D1 (STRAIGHT)	#8 x 6'-6"
L1 (STRAIGHT)	#5 x "F"
L2 (STRAIGHT)	#5 x "H"
S12	#4 x 9'-0"
S14	#4 x 9'-8"
S16	#4 x 10'-4"
S18	#4 x 11'-0"
S20	#4 x 11'-8"
T12	#4 x 8'-0"
T14	#4 x 8'-4"
T16	#4 x 8'-8"
T18	#4 x 9'-0"
T20	#4 x 9'-4"
U12	#6 x 3'-7"
U14	#6 x 3'-11"
U16	#6 x 4'-3"
U18	#6 x 4'-7"
U20	#6 x 4'-11"

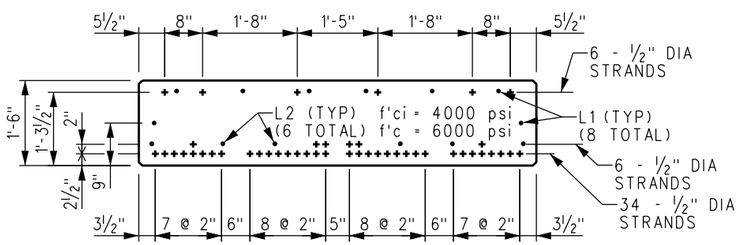

SECTION B/16
SCALE: ¾"=1'-0
(PB17.92 AND PB17.92-C)
18" SLAB BEAM, 16'-0" < "BL" ≤ 18'-0", 46 STRANDS

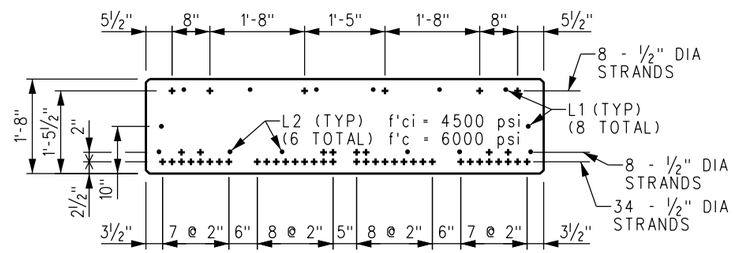

SECTION B/16
SCALE: ¾"=1'-0
(PB19.92 AND PB19.92-C)
20" SLAB BEAM, 18'-0" < "BL" ≤ 20'-0", 50 STRANDS

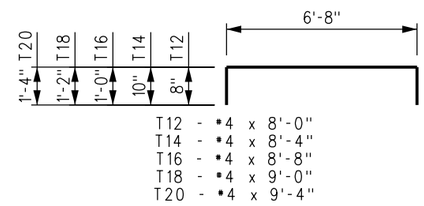

T12 - #4 x 8'-0"
T14 - #4 x 8'-4"
T16 - #4 x 8'-8"
T18 - #4 x 9'-0"
T20 - #4 x 9'-4"

T12, T14, T16, T18 & T20
SCALE: ⅜" = 1'-0"

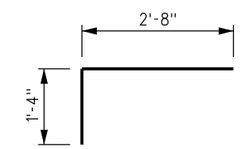

C1
SCALE: ¾" = 1'-0"
EPOXY COATED

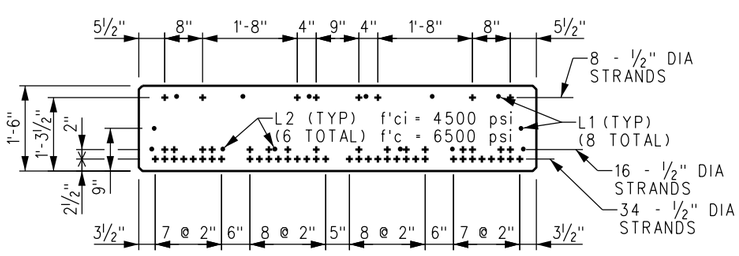

SECTION B/16
SCALE: ¾"=1'-0
18" SLAB BEAM, 18'-0" < "BL" ≤ 20'-0", 58 STRANDS

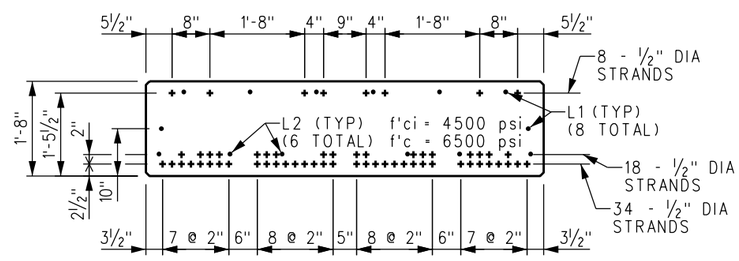

SECTION B/16
SCALE: ¾"=1'-0
20" SLAB BEAM, 20'-0" < "BL" ≤ 22'-0", 60 STRANDS

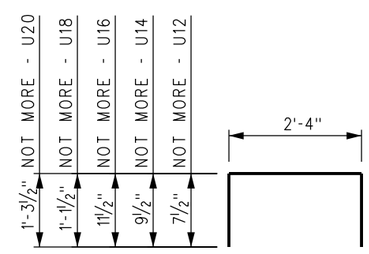

U12, U14, U16, U18 & U20
SCALE: ⅜" = 1'-0"

U12 - #6 x 3'-7"
U14 - #6 x 3'-11"
U16 - #6 x 4'-3"
U18 - #6 x 4'-7"
U20 - #6 x 4'-11"

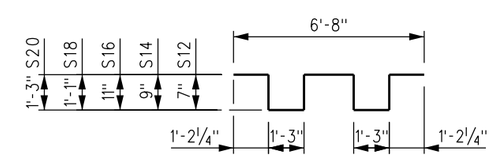

S12, S14, S16, S18 & S20
SCALE: ⅜" = 1'-0"

S12 - #4 x 9'-0"
S14 - #4 x 9'-8"
S16 - #4 x 10'-4"
S18 - #4 x 11'-0"
S20 - #4 x 11'-8"

REV.	DATE	DESCRIPTION	DES.	ENG.
X	XX-XX-XX	REVISION	XX	XX

DRAWN BY: HDR DATE: 03/31/2011

ASSISTANT DIRECTOR: STANDARDS & DESIGN

DIRECTOR OF ENGINEERING AND CONSTRUCTION

METROLINK
SOUTHERN CALIFORNIA REGIONAL RAIL AUTHORITY
ONE GATEWAY PLAZA, 12TH FLOOR, L. A., CA. 90012

ENGINEERING STANDARDS
12", 14", 16", 18" AND 20" PRECAST/PRESTRESSED CONCRETE SLAB BEAMS (3 OF 3)
PRECAST/PRESTRESSED CONCRETE SLAB BEAM BRIDGES

STANDARD 6002
SCALE: AS NOTED
REVISION –
SHEET 18 OF 22
CADD FILE: ES6002-18

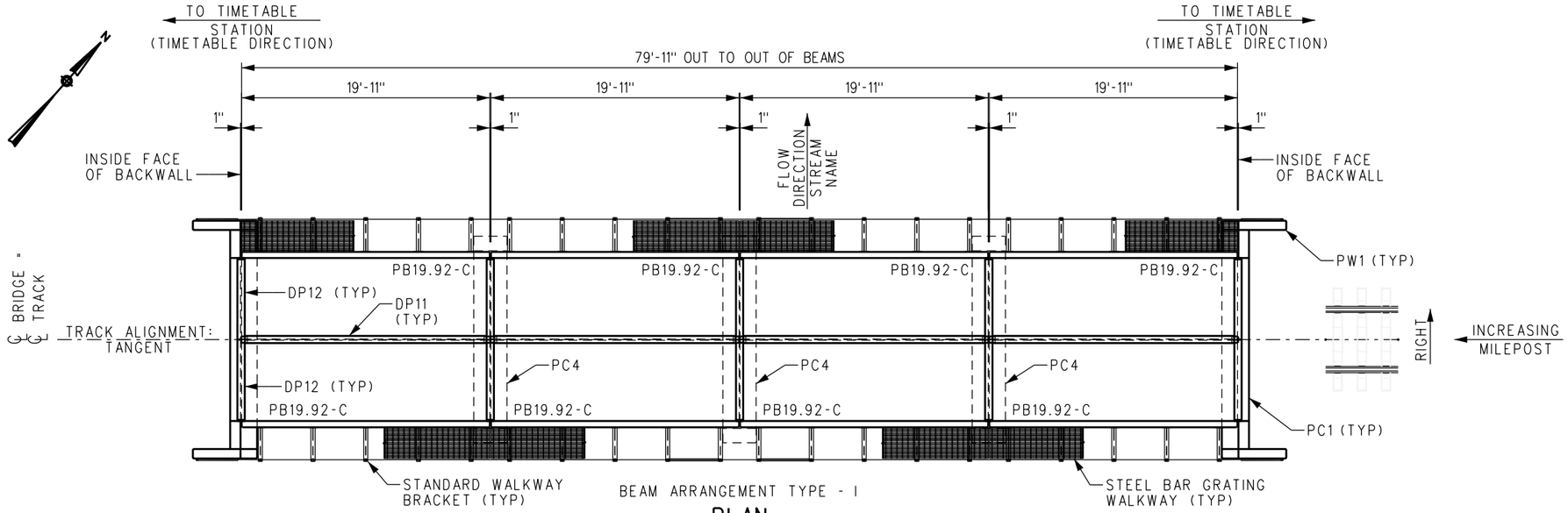

BEAM ARRANGEMENT TYPE - I

PLAN

SCALE: 3/16" = 1'-0"

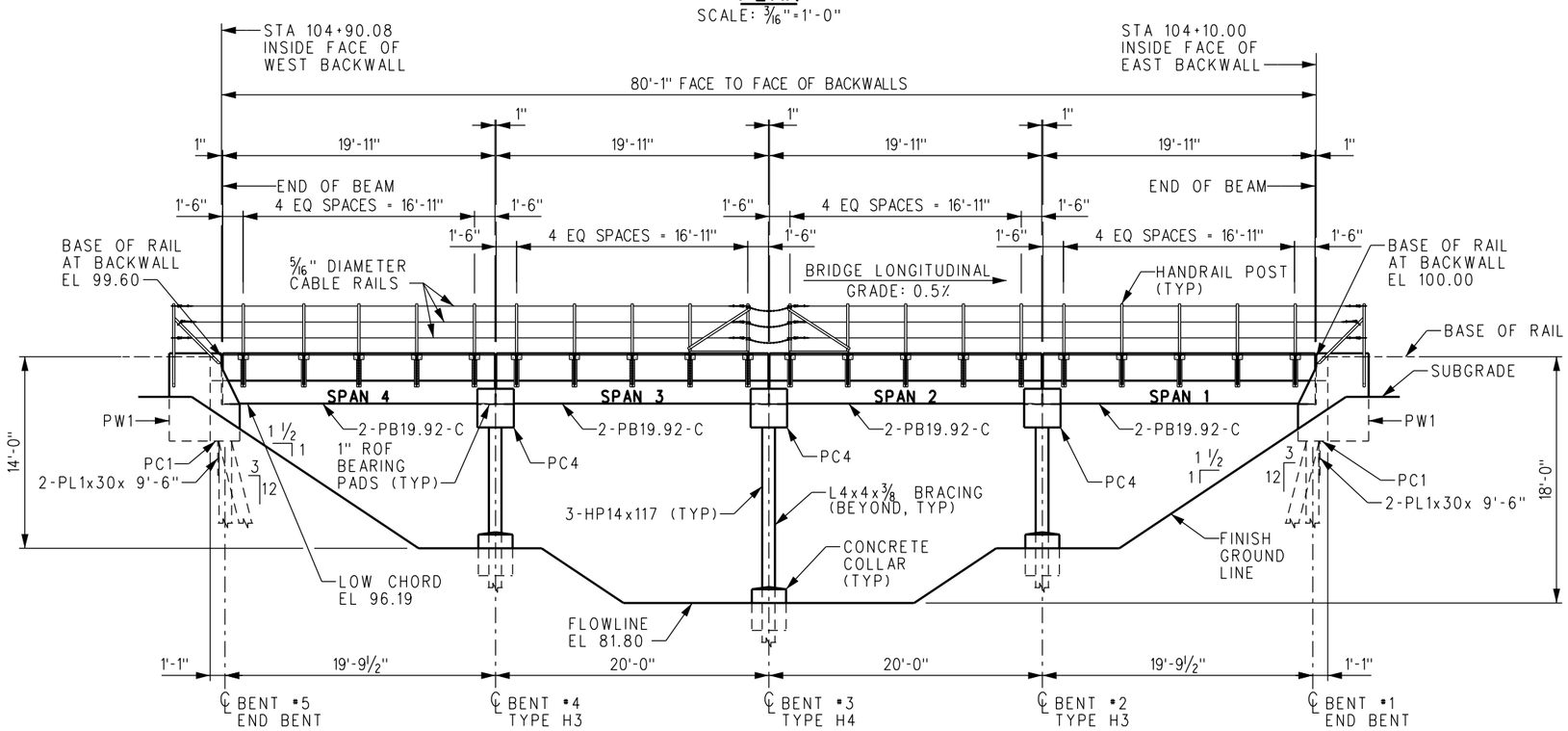

ELEVATION

SCALE: 3/16" = 1'-0"

TABLE OF ELEVATIONS

BENT #	T/R EL	B/R EL	T/SEAT	PILE CUTOFF
1	100.59	100.00	96.50	93.83
2	100.49	99.90	96.40	94.73
3	100.39	99.80	96.30	94.63
4	100.29	99.70	96.20	94.53
5	100.19	99.60	96.10	93.43

ESTIMATED LIFTING WEIGHTS

PB19.92-C	19.0 TONS
PC1	10.5 TONS
PC4	6.5 TONS
PW1	1.7 TONS

DRAWING LIST

THIS SET	1	SAMPLE GENERAL ARRANGEMENT
	2	SAMPLE END BENT SECTION AND PILE LAYOUT
	3	SAMPLE BENT SECTIONS
	4	SAMPLE BILL OF MATERIAL
REF	ES6002 - PRECAST/PRESTRESSED CONCRETE SLAB BEAM BRIDGES	

SAMPLE SHEET 1 OF 4

REV.	DATE	DESCRIPTION	DES.	ENG.
X	XX-XX-XX	REVISION	XX	XX

DRAWN BY: HDR DATE: 03/31/2011

ASSISTANT DIRECTOR: STANDARDS & DESIGN

DIRECTOR OF ENGINEERING AND CONSTRUCTION

METROLINK

SOUTHERN CALIFORNIA REGIONAL RAIL AUTHORITY
ONE GATEWAY PLAZA, 12TH FLOOR, L. A., CA. 90012

ENGINEERING STANDARDS

SAMPLE GENERAL ARRANGEMENT
PRECAST/PRESTRESSED CONCRETE
SLAB BEAM BRIDGES

STANDARD: 6002
SCALE: AS NOTED
REVISION: –
SHEET: 19 OF 22
CADD FILE: ES6002-19

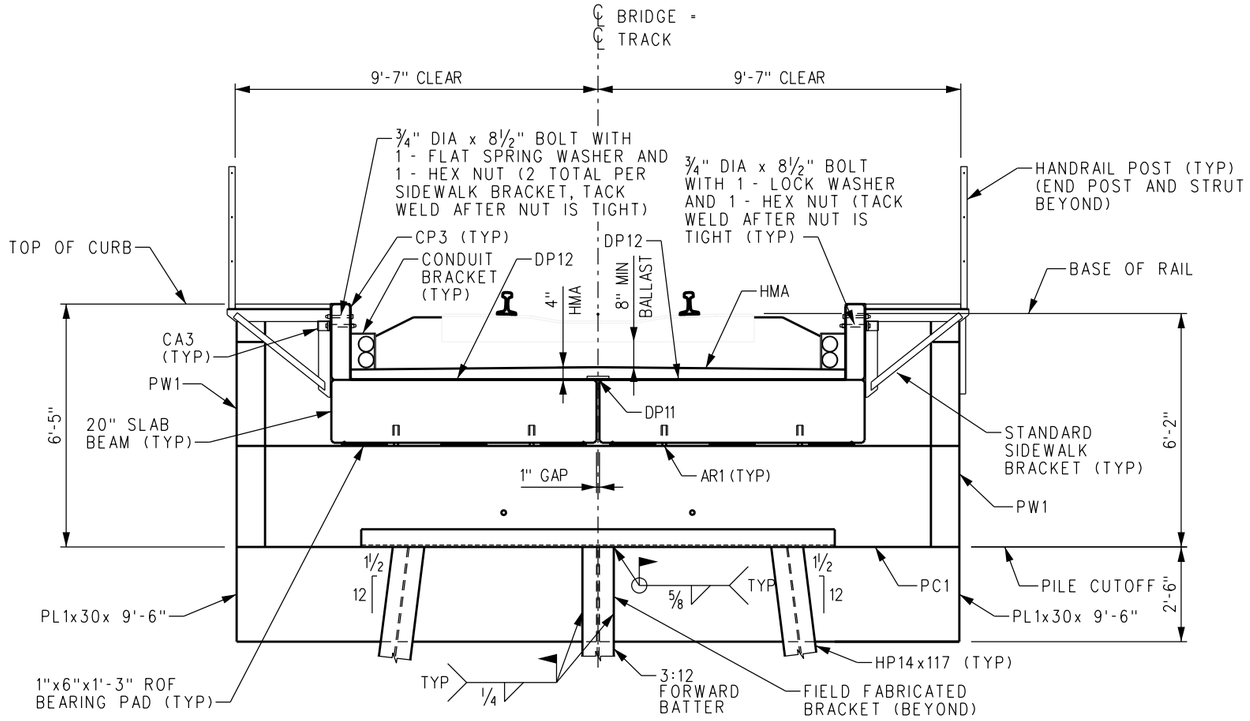

END BENT SECTION

SCALE: ½=1'-0"

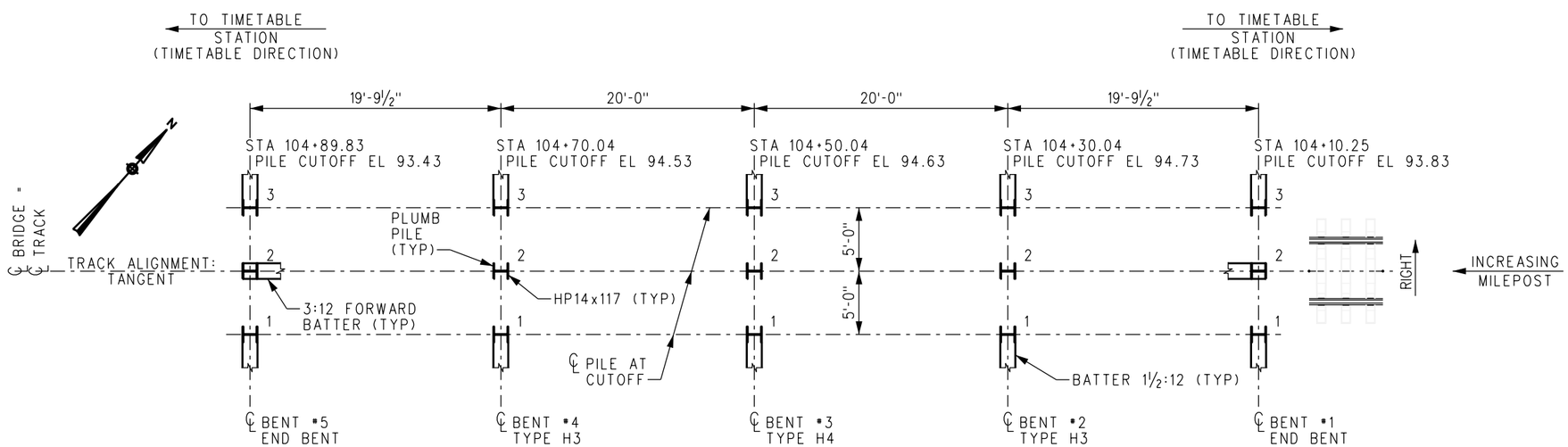

PILE LAYOUT

SCALE: 3/16=1'-0"

SAMPLE SHEET 2 OF 4

REV.	DATE	DESCRIPTION	DES.	ENG.
X	XX-XX-XX	REVISION	XX	XX

DRAWN BY: HDR DATE: 03/31/2011

ASSISTANT DIRECTOR: STANDARDS & DESIGN

DIRECTOR OF ENGINEERING AND CONSTRUCTION

METROLINK®

SOUTHERN CALIFORNIA REGIONAL RAIL AUTHORITY
ONE GATEWAY PLAZA, 12TH FLOOR, L. A., CA. 90012

ENGINEERING STANDARDS

SAMPLE END BENT SECTION AND PILE LAYOUT
PRECAST/PRESTRESSED CONCRETE
SLAB BEAM BRIDGES

STANDARD 6002
SCALE: AS NOTED
REVISION –
SHEET 20 OF 22
CADD FILE: ES6002-20

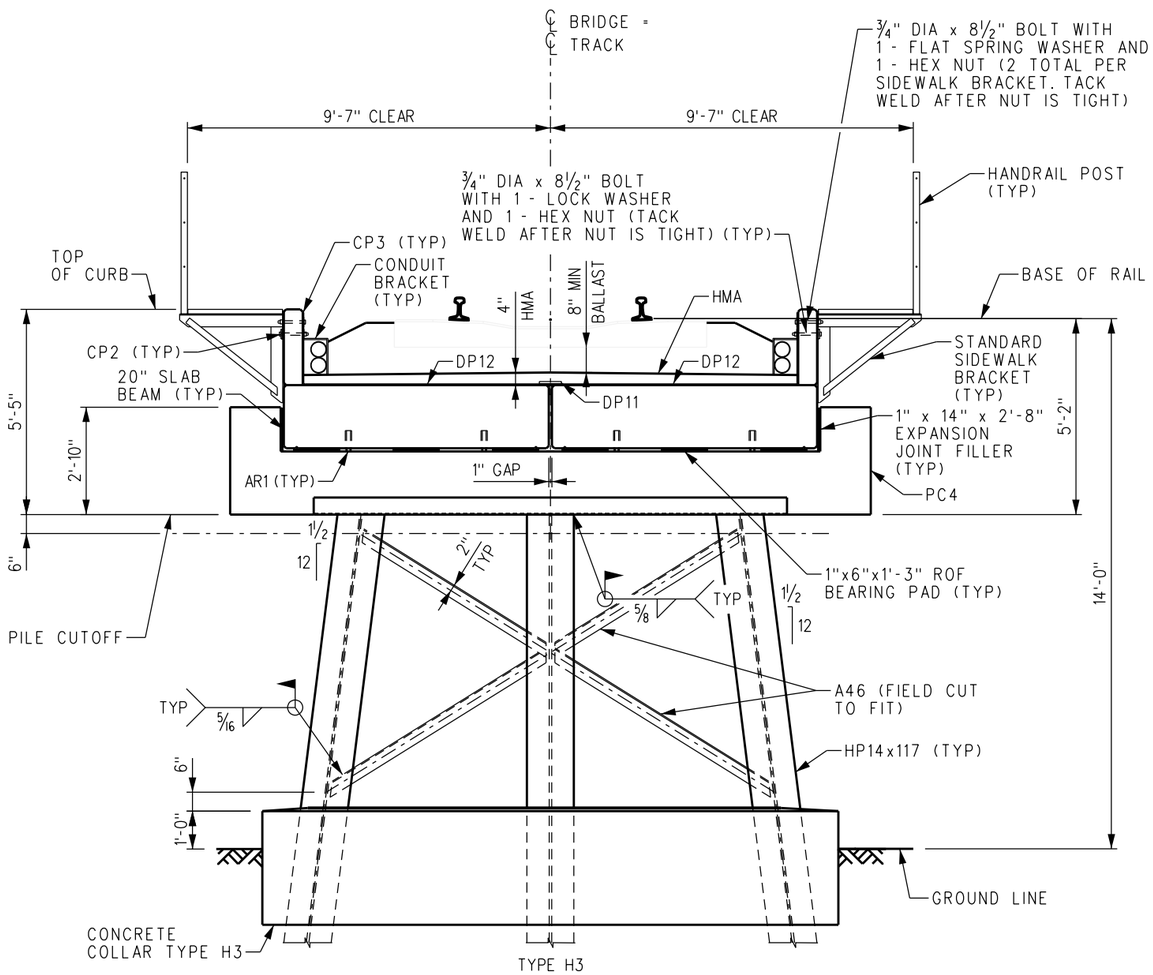

BENT #2 AND #4 SECTION

SCALE: ½"=1'-0"

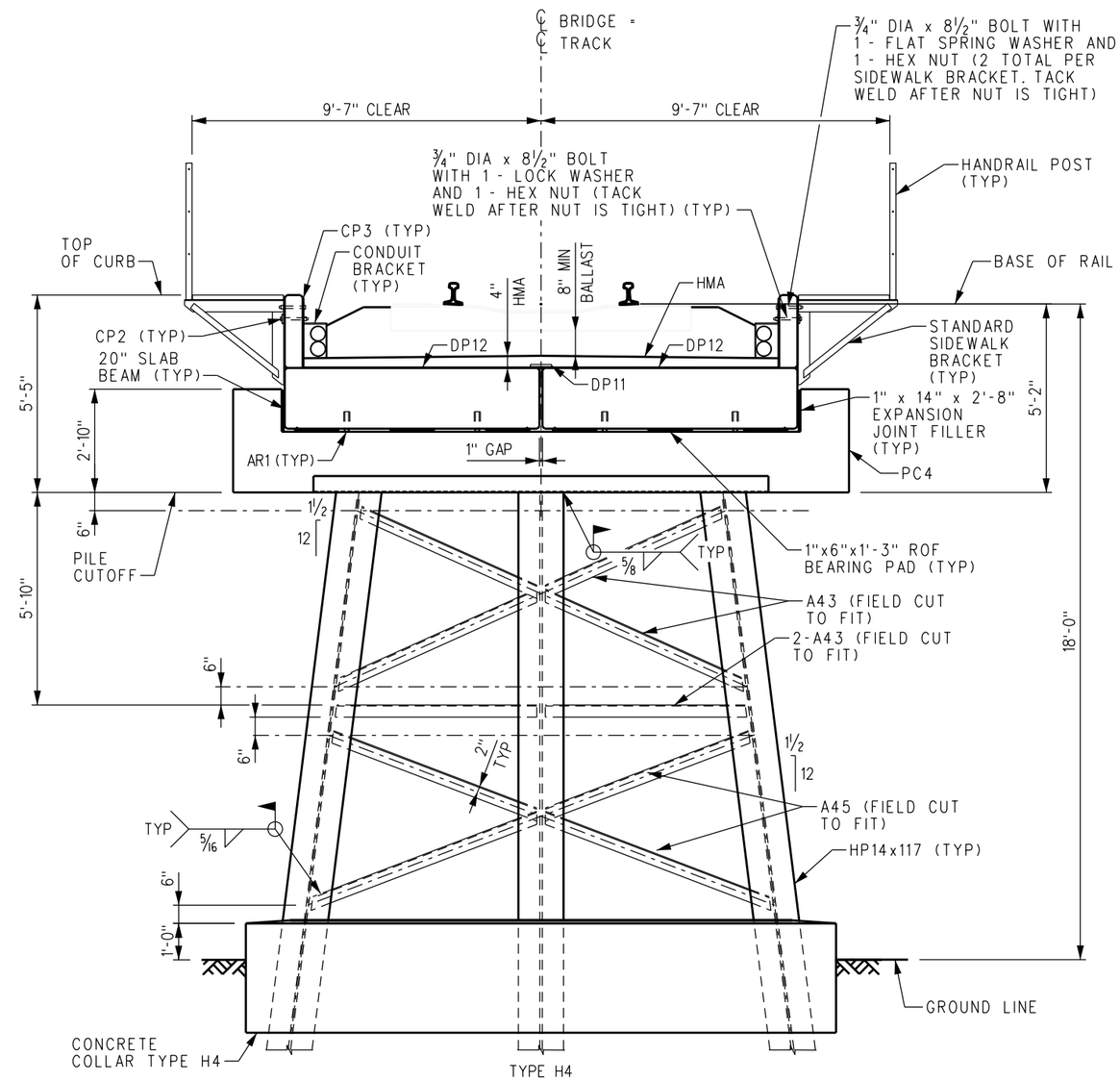

BENT #3 SECTION

SCALE: ½"=1'-0"

SAMPLE SHEET 3 OF 4

X	XX-XX-XX	REVISION	XX	XX
REV.	DATE	DESCRIPTION	DES.	ENG.

DRAWN BY: HDR DATE: 03/31/2011

ASSISTANT DIRECTOR: STANDARDS & DESIGN

DIRECTOR OF ENGINEERING AND CONSTRUCTION

METROLINK®
SOUTHERN CALIFORNIA REGIONAL RAIL AUTHORITY
ONE GATEWAY PLAZA, 12TH FLOOR, L. A., CA. 90012

ENGINEERING STANDARDS

SAMPLE BENT SECTIONS
PRECAST/PRESTRESSED CONCRETE
SLAB BEAM BRIDGES

STANDARD 6002
SCALE: AS NOTED
REVISION –
SHEET 21 OF 22
CADD FILE: ES6002-21

UserName=> carlosa Date Plotted: 10/5/2011 2:28:25 PM Plot Driver=> S:\Plot Drivers\pdf.plt FileName=> s:\V8EngStds\6000\ES6002-21.dgn

LIST OF STANDARD BRIDGE MATERIALS

PILES
HP14x117 STEEL BEARING PILE
HP14x117 PILE SPLICER
TIP REINFORCEMENT HARD-BITE POINT MODEL HP-77600-B
MISCELLANEOUS STEEL
DECK PLATE DP11 (SEE DETAIL, SHEET 13)
DECK PLATE DP12 (SEE DETAIL, SHEET 13)
DECK PLATE DP13 (SEE DETAIL, SHEET 13)
CURB PLATE CP2 (SEE DETAIL, SHEET 13)
CURB PLATE CP3 (SEE DETAIL, SHEET 13)
CURB ANGLE CA3 (SEE DETAIL, SHEET 13)
WASHER W1 (SEE DETAIL, SHEET 14)
CONDUIT BRACKET (SEE DETAIL, SHEET 14)
STANDARD SIDEWALK BRACKET (SEE DETAIL, SHEET 14)
UNISTRUT 2x2x5/16 NO 20-F-12 (SEE DETAIL, SHEET 7)
BACKWALL PLATE, PL1x30x 7'-0" ASTM A588, GR 50 (PLAIN) (SEE DETAIL, SHEET 7)
BACKWALL PLATE, PL1x30x 9'-6" ASTM A588, GR 50 (PLAIN) (SEE DETAIL, SHEET 7)
BRACING
ANGLE A42, 4x4x3/8x 12'-0 (PLAIN)
ANGLE A43, 4x4x3/8x 13'-0 (PLAIN)
ANGLE A44, 4x4x3/8x 14'-0 (PLAIN)
ANGLE A45, 4x4x3/8x 15'-0 (PLAIN)
ANGLE A46, 4x4x3/8x 16'-0 (PLAIN)
PRECAST CONCRETE MEMBERS
PRECAST CAP PC1 (SEE DETAILS, SHEET 11)
PRECAST CAP PC2(R) (SEE DETAILS, SHEET 11)
PRECAST CAP PC2(L) (SEE DETAILS, SHEET 11)
PRECAST CAP PC3(R) (SEE DETAILS, SHEET 11)
PRECAST CAP PC3(L) (SEE DETAILS, SHEET 11)
PRECAST CAP PC4 (SEE DETAILS, SHEET 12)
PRECAST CAP PC4B (SEE DETAILS, SHEET 12)
PRECAST WING WALL PW1 (SEE DETAILS, SHEET 12)
PRECAST/PRESTRESSED CONCRETE SLABS
PB11.92-C (12" DEEP, 54 STRANDS, WITH CURB)
PB11.92 (12" DEEP, 54 STRANDS)
PB13.92-C (14" DEEP, 54 STRANDS, WITH CURB)
PB13.92 (14" DEEP, 54 STRANDS)
PB15.92-C (16" DEEP, 50 STRANDS, WITH CURB)
PB15.92 (16" DEEP, 50 STRANDS)
PB17.92-C (18" DEEP, 46 STRANDS, WITH CURB)
PB17.92 (18" DEEP, 46 STRANDS)
PB19.92-C (20" DEEP, 50 STRANDS, WITH CURB)
PB19.92 (20" DEEP, 50 STRANDS)
CAST-IN-PLACE CONCRETE COLLARS
4000 PSI CONCRETE
REINFORCING STEEL

MISCELLANEOUS MATERIAL
STEEL GRATING 19W4 SERR CS (SEE DETAIL, SHEET 14)
5/16" DIAMETER AIRCRAFT CABLE (SEE DETAIL, SHEET 6)
4" DIA GALVANIZED STD STEEL PIPE (SEE DETAIL, SHEET 5)
3 1/2" HVU ADHESIVE CAPSULE
1" x 6" x 1'-3" ROF BEARING PAD (SEE DETAIL, SHEET 6)
1" x 14" x 2'-8" EXPANSION JOINT FILLER (SEE DETAIL, SHEET 6)
1/2" x 30" x 3'-1" EXPANSION JOINT FILLER (SEE DETAIL, SHEET 9)
HMA PAVEMENT
HMA TRACK UNDERLAY
CHEMICAL MASTIC CM-15 METALLIC ALUMINUM COLOR PAINT
ADHESIVE FOR BEARING PADS
GROUT
EPOXY GROUT
PETROLATUM (SEE DETAIL, SHEET 10)
FREE-DRAINING GRANULAR FILL (SEE DETAIL, SHEET 10)
HARDWARE
3/4" DIA x 8 1/2" BOLT WITH 1 - FLAT SPRING WASHER AND 1 - HEX NUT (SEE DETAIL, SHEET 5)
3/4" DIA x 8 1/2" BOLT WITH 1 - LOCK WASHER AND 1 - HEX NUT (SEE DETAIL, SHEET 5)
3/8" DIA x 6 1/2" THREADED ROD (SEE DETAIL, SHEET 7)
3/8" DIA x 5" THREADED ROD (CONDUIT BRACKET ANCHOR)
SADDLE CLIP (SEE DETAIL, SHEET 6)
1/4" DIA x 2 1/2" HEX BOLT WITH 1 - SPRING WASHER AND 1 - HEX NUT (SEE DETAIL, SHEET 6)
3/8" DIA EYEBOLT, 3" LONG SHANK WITH 1" ID EYE, PLAIN PATTERN, DROP FORGED STEEL WITH 1 - FLAT WASHER AND 1 - HEX NUT (SEE DETAIL, SHEET 7)
MALLEABLE WIRE ROPE CLIP (GALV) WITH 2 - ELASTIC LOCKNUTS (GALV) FOR 5/16" DIA CABLE (SEE DETAIL, SHEET 7)
3/8" SAFETY CHAIN (SEE DETAIL, SHEET 7)
3/8" QUICK LINK FOR 3/8" SAFETY CHAIN (SEE DETAIL, SHEET 7)

BILL OF MATERIAL

REQ'D	UNIT	DESCRIPTION
8	EA	PB19.92-C
2	EA	PC1
3	EA	PC4
4	EA	PW1
15.6	CY	CONCRETE FOR COLLAR H3 (7.8 CU YD EA)
8.1	CY	CONCRETE FOR COLLAR H4
2	LOT	REINFORCING STEEL FOR COLLAR H3
1	LOT	REINFORCING STEEL FOR COLLAR H4
30	EA	HP14x117x 40'-0"
15	EA	PIPE TIP FOR HP14x117
15	EA	PILE SPLICER FOR HP14x117
4	EA	A46
2	EA	A45
4	EA	A43
4	EA	DP11
10	EA	DP12
16	EA	W1
89	LF	2"x2" UNISTRUT NO 20-F-12
16	EA	HANDRAIL END POST ANCHOR 3/8" DIA x 6 1/2" THREADED ROD
40	EA	SIDEWALK BRACKET
80	EA	SIDEWALK BRACKET BOLTS 3/4" DIA x 8 1/2"
4	EA	PL1x30x 9'-6"
6	EA	CURB PLATE BOLTS 3/4" DIA x 8 1/2"
8	EA	GRATING 19W4 (1 1/2" x 1/8") SERR CS 2'-6" x 20'-0" SPAN SERRATED TRIMMED, GALVANIZED
80	EA	SADDLE CLIP
80	EA	GRATING BOLTS 1/4" DIA x 2 1/2"
600	LF	5/16" DIAMETER AIRCRAFT CABLE (12-LENGTHS OF 50' EA)
24	EA	3/8" DIA EYEBOLT WITH NUT AND WASHER
48	EA	MALLEABLE WIRE ROPE CLIP FOR 5/16" DIA CABLE
10	LF	3/8" SAFETY CHAIN
6	EA	3/8" QUICK LINK FOR 3/8" SAFETY CHAIN
4	EA	CA3
6	EA	CP2
40	EA	CP3
30	EA	CONDUIT BRACKET
30	EA	CONDUIT BRACKET ANCHOR 3/8" DIA x 5" THREADED ROD
30	EA	3 1/2" HILTI HVU ADHESIVE CAPSULE FOR 3/8" DIA HILTI HAS ROD OR EQUAL
327	LF	4" DIA GALVANIZED STD STEEL PIPE
48	EA	1" x 6" x 1'-3" ROF BEARING PAD
6	EA	1" x 14" x 2'-8" EXPANSION JOINT FILLER
1	LOT	HMA PAVEMENT
1	LOT	HMA TRACK UNDERLAY
1	LOT	PAINT, CHEMICAL-MASTIC CM-15, METALLIC ALUMINUM COLOR
1	LOT	ADHESIVE FOR BEARING PADS
1	LOT	GROUT
1	LOT	EPOXY GROUT
1	LOT	PETROLATUM
7.1	CY	FREE-DRAINING GRANULAR FILL

EST WEIGHT OF STEEL PILING: 140,400 LBS
EST WEIGHT OF STEEL BRACING: 1,435 LBS
EST WEIGHT OF BAR GRATING: 2,940 LBS
EST WEIGHT OF MISCELLANEOUS STEEL: 8,690 LBS
(EXCLUDING BOLTS, NUTS AND WASHERS)
EST WEIGHT OF REINFORCING STEEL: 795 LBS

NOTE:

ROF = RANDOM ORIENTED FIBER

SAMPLE SHEET 4 OF 4

REV.	DATE	DESCRIPTION	DES.	ENG.
X	XX-XX-XX	REVISION	XX	XX

DRAWN BY: HDR DATE: 03/31/2011

ASSISTANT DIRECTOR: STANDARDS & DESIGN

DIRECTOR OF ENGINEERING AND CONSTRUCTION

METROLINK®
SOUTHERN CALIFORNIA REGIONAL RAIL AUTHORITY
ONE GATEWAY PLAZA, 12TH FLOOR, L. A., CA. 90012

ENGINEERING STANDARDS

SAMPLE BILL OF MATERIAL
PRECAST/PRESTRESSED CONCRETE
SLAB BEAM BRIDGES

STANDARD 6002
SCALE: NTS
REVISION –
SHEET 22 OF 22
CADD FILE: ESE6002-22

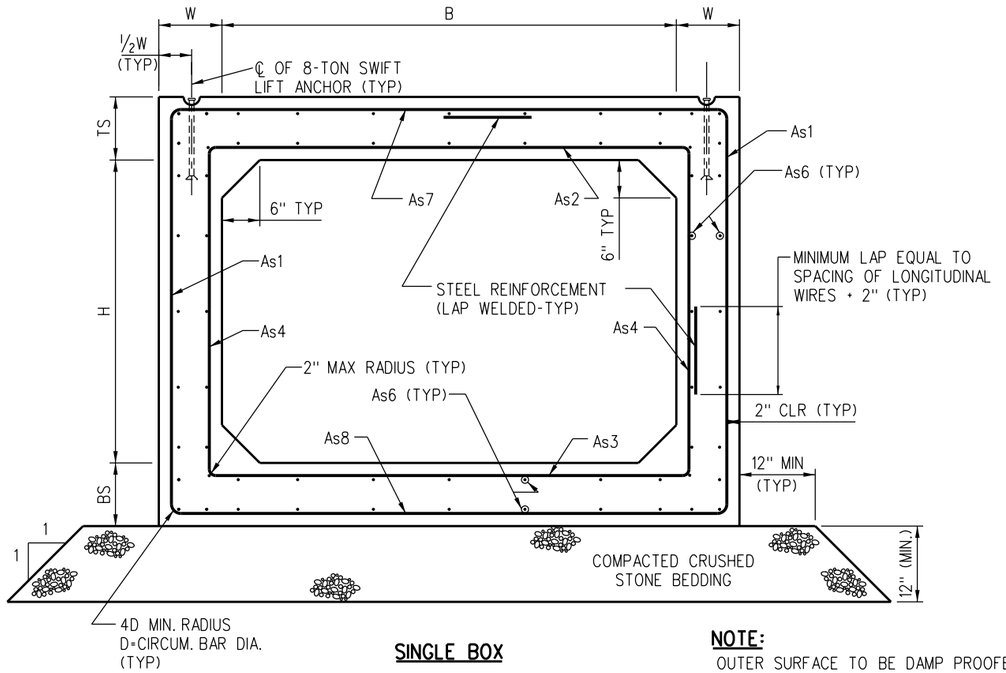

SINGLE BOX

NOTE:
OUTER SURFACE TO BE DAMP PROOFED IN ACCORDANCE WITH AREMA CHAPTER 29

NOTES:

A. SPECIFICATIONS
1. DESIGN: AREMA - 2004 SERVICE LOAD DESIGN
CULVERTS DESIGNED IN ACCORDANCE WITH SECTION 16, CHAPTER 8 OF AREMA MANUAL
2. LOAD COMBINATION: GROUP 1: D + L + I + E
WHERE D = DEAD LOAD, L = LIVE LOAD, I = IMPACT, E = EARTH LOAD

B. LOADINGS:
1. LIVE LOAD: COOPER E80 - DISTRIBUTION OF LIVE LOAD TO THE CULVERT SHALL BE IN ACCORDANCE WITH FIGURE 8-16-2, SECTION 16 CHAPTER 8 OF AREMA MANUAL.
2. IMPACT = 39.1%
3. DEAD LOAD - INCLUDES WEIGHT OF TRACK, BALLAST, AND FILL ON TOP SLAB OF THE STRUCTURE IN ADDITION TO THE BOX SELF WEIGHT.
4. LATERAL LOAD:
- EQUIVALENT FLUID PRESSURE OF 40 PCF.
- UNIFORM LATERAL SURCHARGE PRESSURE OF 570 PSF.
5. MATERIAL PROPERTIES:
- FC' = 5,000 PSI
- FY = 60,000 PSI
- N = 7

C. MATERIALS
1. ALL WELDED WIRE REINFORCEMENT SHALL CONFORM TO ASTM A497
- ALLOWABLE TENSILE STRESS OF 24,000 PSIFOR SERVICE LOAD DESIGN

B (ft)	ID	H (ft)	TS (in)	BS (in)	W (in)	As1 (in²/ft)	As2 (in²/ft)	As3 (in²/ft)	As4 (in²/ft)	As6 MIN * (in²/ft)	As7 (in²/ft)	As8 (in²/ft)	FLOW A (in2)	SELF WT (lbs/ft)	SEGMNT L (ft)
4	PC-SB42	2	8	8	8	0.40	0.40	0.40	0.30	0.30	0.40	0.40	1080	1542	8,6,4
	PC-SB43	3	8	8	8								1656	1742	8,6,4
	PC-SB44	4	8	8	8								2232	1942	8,6,4
6	PC-SB62	2	9	9	9	0.80	0.80	0.80	0.30	0.30	0.80	0.80	1656	2213	8,6,4
	PC-SB63	3	9	9	9								2520	2438	8,6,4
	PC-SB64	4	9	9	9								3384	2663	8,6,4
8	PC-SB82	2	12	12	12	0.93	0.93	0.93	0.30	0.30	0.93	0.93	2232	3675	4
	PC-SB83	3	12	12	12	0.93	0.93	1.20			0.93	0.93	3384	3975	4
	PC-SB84	4	12	12	12	0.80	1.20	1.20			1.20	0.80	4536	4275	4

* As6 IS CROSS WIRE SIZE WELDED TO ALL OTHER WIRE CALLOUT.

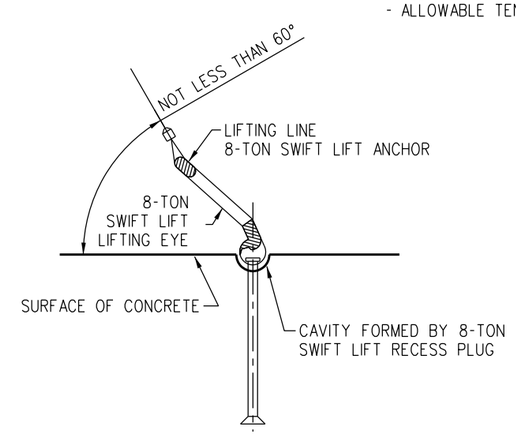

LIFTING DETAIL

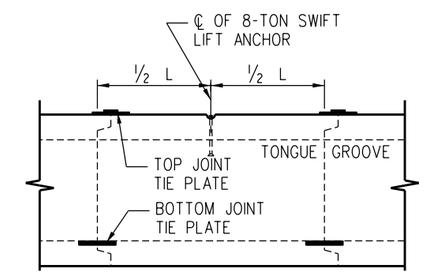

BOX SIDE ELEVATION

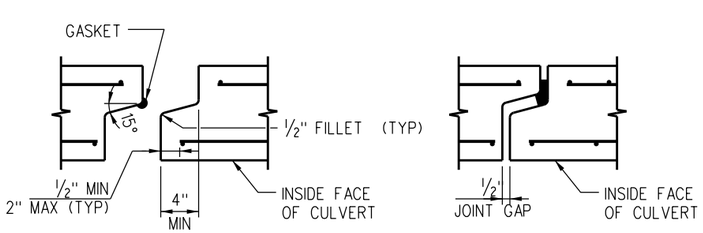

LONGITUDINAL JOINT DETAIL

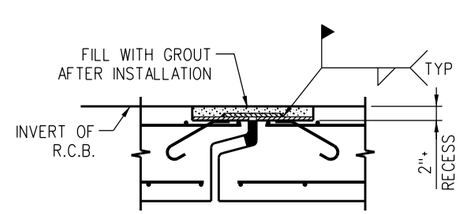

BOTTOM JOINT TIE PLATE

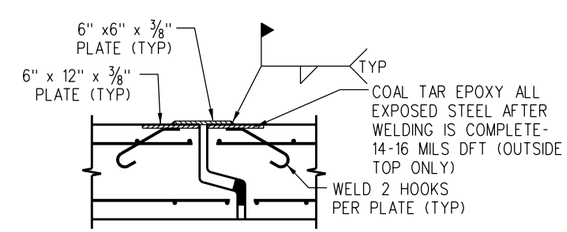

TOP JOINT TIE PLATE

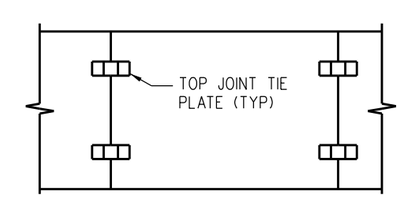

BOX PLAN VIEW

REV.	DATE	DESCRIPTION	DES.	ENG.
X	XX-XX-XX	REVISION	XX	XX

DRAWN BY: A. CARLOS DATE: 03/31/2011

ASSISTANT DIRECTOR: STANDARDS & DESIGN

DIRECTOR OF ENGINEERING AND CONSTRUCTION

METROLINK®
SOUTHERN CALIFORNIA REGIONAL RAIL AUTHORITY
ONE GATEWAY PLAZA, 12TH FLOOR, L. A., CA. 90012

ENGINEERING STANDARDS

GENERAL DETAILS
PRECAST CONCRETE
SINGLE BOX CULVERTS

STANDARD 6003
SCALE: NONE
REVISION –
SHEET 1 OF 4
CADD FILE: ES6003-01

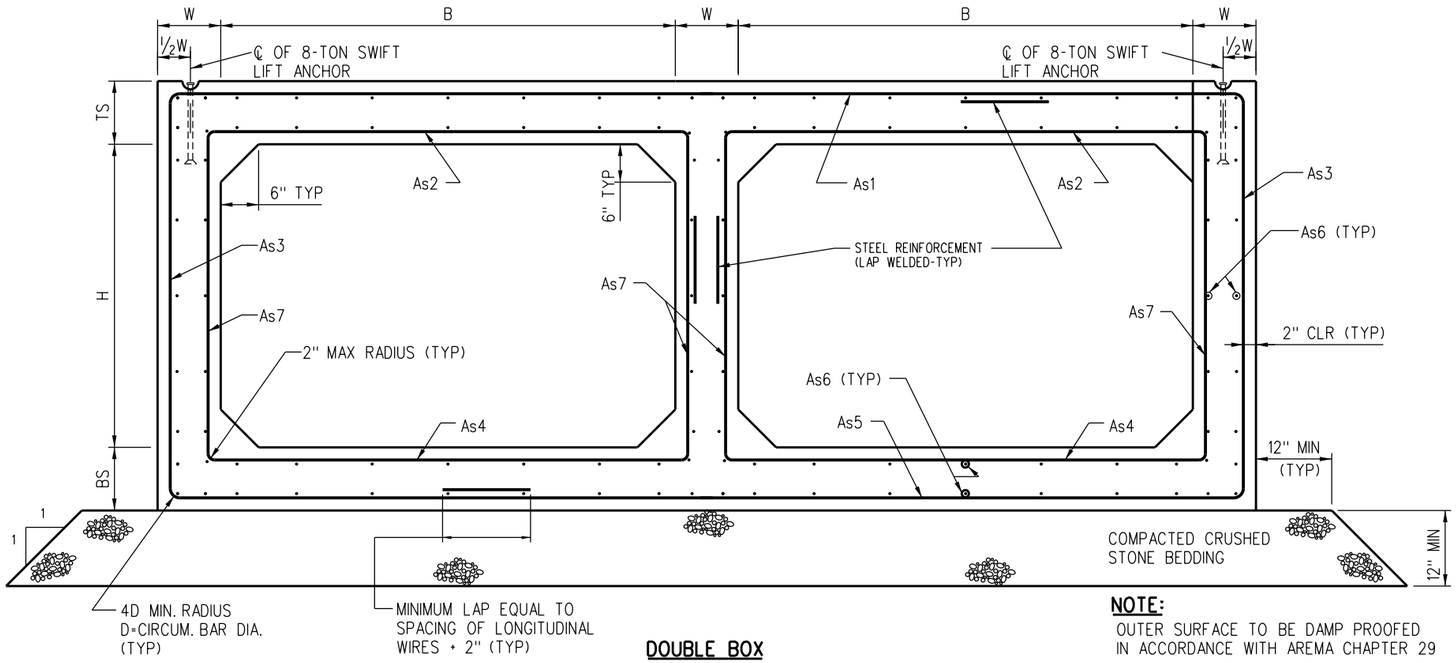

DOUBLE BOX

NOTE:
OUTER SURFACE TO BE DAMP PROOFED IN ACCORDANCE WITH AREMA CHAPTER 29

NOTES:

A. SPECIFICATIONS
1. DESIGN: AREMA - 2004 SERVICE LOAD DESIGN
CULVERTS DESIGNED IN ACCORDANCE WITH SECTION 16, CHAPTER 8 OF AREMA MANUAL
2. LOAD COMBINATION: GROUP 1: D + L + I + E
WHERE D = DEAD LOAD, L = LIVE LOAD, I = IMPACT, E = EARTH LOAD

B. LOADINGS:
1. LIVE LOAD: COOPER E80 - DISTRIBUTION OF LIVE LOAD TO THE CULVERT SHALL BE IN ACCORDANCE WITH FIGURE 8-16-2, SECTION 16 CHAPTER 8 OF AREMA MANUAL.
2. IMPACT = 39.1%
3. DEAD LOAD - INCLUDES WEIGHT OF TRACK, BALLAST, AND FILL ON TOP SLAB OF THE STRUCTURE IN ADDITION TO THE BOX SELF WEIGHT.
4. LATERAL LOAD:
- EQUIVALENT FLUID PRESSURE OF 40 PCF.
- UNIFORM LATERAL SURCHARGE PRESSURE OF 570 PSF.
5. MATERIAL PROPERTIES:
- FC' = 5,000 PSI
- FY = 60,000 PSI
- N = 7

C. MATERIALS
1. ALL WELDED WIRE REINFORCEMENT SHALL CONFORM TO ASTM A497
- ALLOWABLE TENSILE STRESS OF 24,000 PSIFOR SERVICE LOAD DESIGN

B (ft)	ID	H (ft)	TS (in)	BS (in)	W (in)	As1 (in²/ft)	As2 (in²/ft)	As3 (in²/ft)	As4 (in²/ft)	As5 (in²/ft)	As6 MIN * (in²/ft)	As7 (in²/ft)	FLOW A (in2)	SELF WT (lbs/ft)	SEGMNT L (ft)
5	PC-DB52	2	8	8	8	0.93	0.60	0.60	0.60	0.93	0.30	0.30	2736	3150	6.4
	PC-DB53	3	8	8	8								4176	3450	6.4
	PC-DB54	4	8	8	8								5616	3750	6.4
6	PC-DB62	2	10	10	10	1.20	0.60	0.60	0.60	1.20	0.30	0.30	3312	4525	4
	PC-DB63	3	10	10	10								5040	4900	4
	PC-DB64	4	10	10	10								6768	5275	4
7	PC-DB72	2	11	11	11	1.58	0.93	0.60	0.93	1.20	0.30	0.30	3888	5581	3
	PC-DB73	3	11	11	11								5904	5994	3
	PC-DB74	4	11	11	11								7920	6406	3
8	PC-DB82	2	12	12	12	1.58	0.93	0.60	0.93	1.58	0.30	0.30	4464	6750	3
	PC-DB83	3	12	12	12								6768	7200	3
	PC-DB84	4	12	12	12								9072	7650	3

* As6 IS CROSS WIRE SIZE WELDED TO ALL OTHER WIRE CALLOUT.

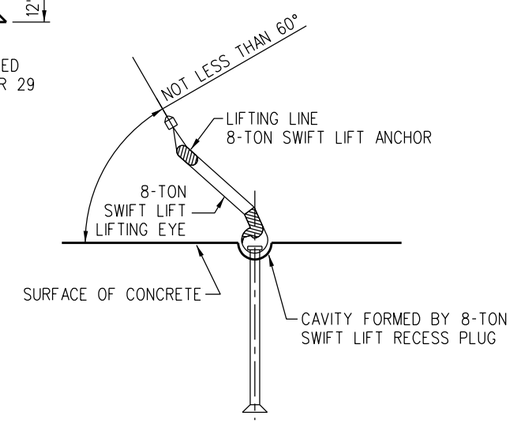

LIFTING DETAIL

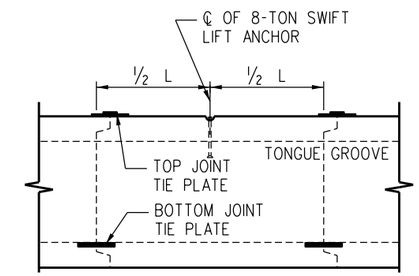

BOX SIDE ELEVATION

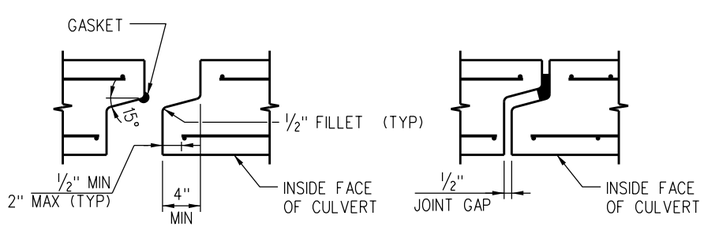

LONGITUDINAL JOINT DETAIL

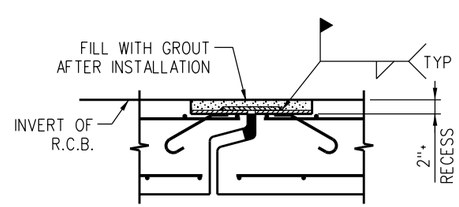

BOTTOM JOINT TIE PLATE

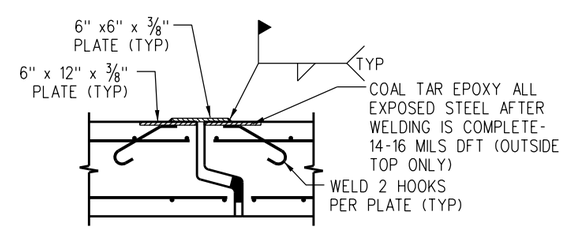

TOP JOINT TIE PLATE

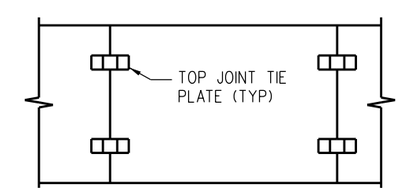

BOX PLAN VIEW

REV.	DATE	DESCRIPTION	DES.	ENG.
X	XX-XX-XX	REVISION	XX	XX

DRAWN BY: A. CARLOS DATE: 03/31/2011

ASSISTANT DIRECTOR: STANDARDS & DESIGN

DIRECTOR OF ENGINEERING AND CONSTRUCTION

METROLINK®
SOUTHERN CALIFORNIA REGIONAL RAIL AUTHORITY
ONE GATEWAY PLAZA, 12TH FLOOR, L. A., CA. 90012

ENGINEERING STANDARDS

GENERAL DETAILS
PRECAST CONCRETE
DOUBLE BOX CULVERTS

STANDARD 6003
SCALE: NONE
REVISION –
SHEET 2 OF 4
CADD FILE: ES6003-02

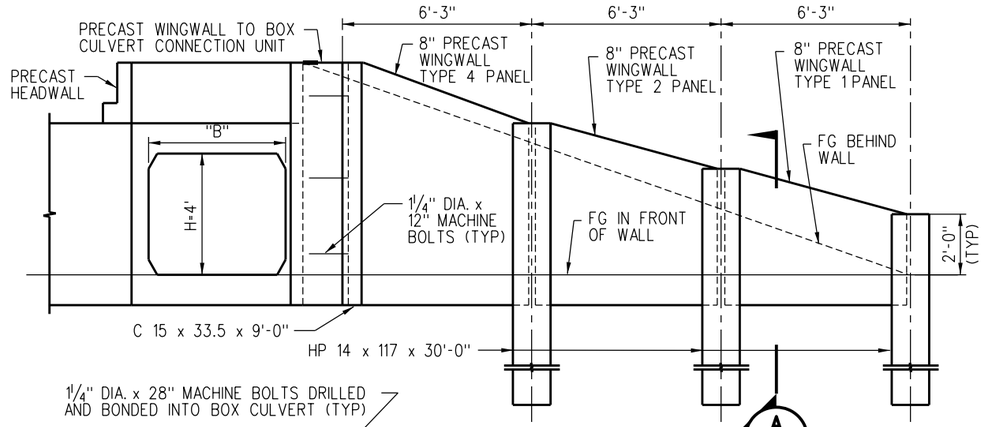

ELEVATION - BOX H = 4'

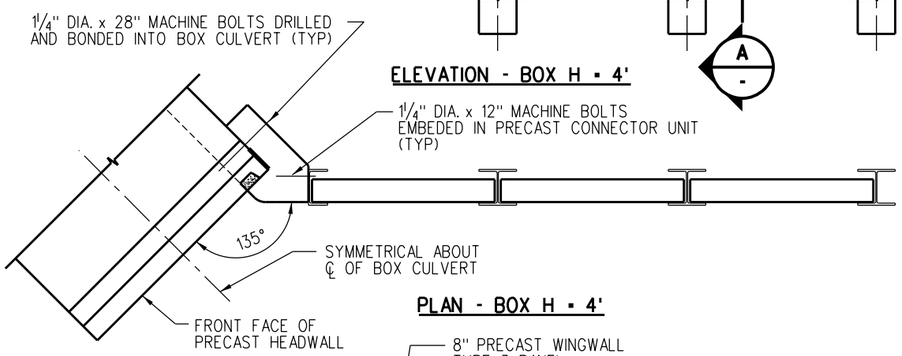

PLAN - BOX H = 4'

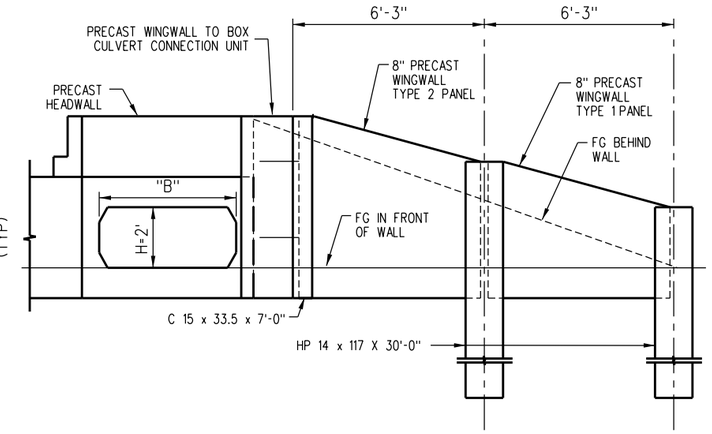

ELEVATION - BOX H = 2'

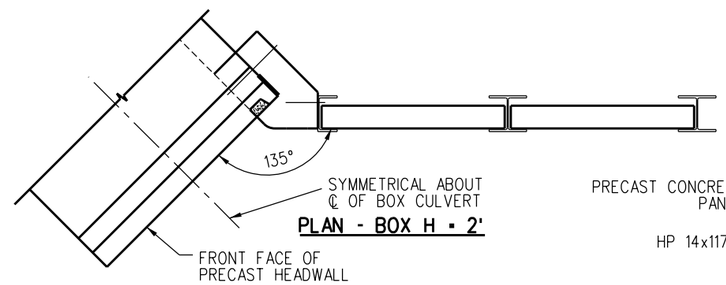

PLAN - BOX H = 2'

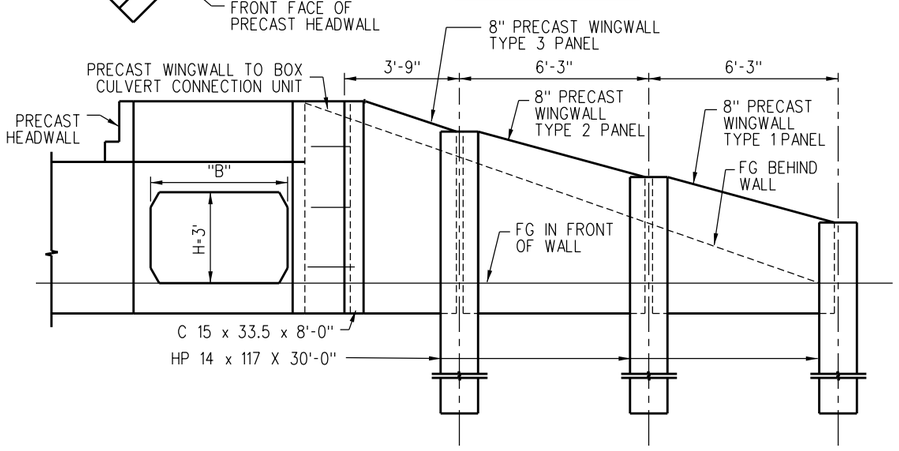

ELEVATION - BOX H = 3'

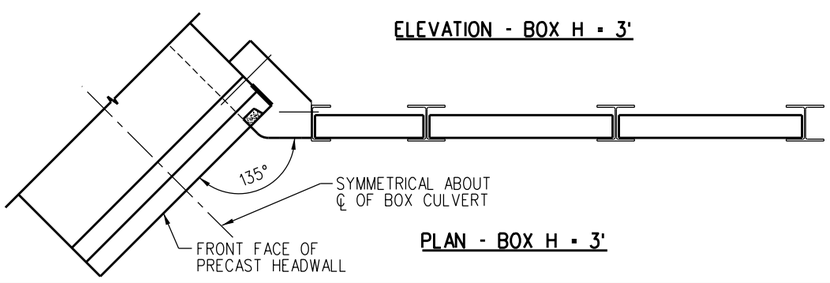

PLAN - BOX H = 3'

HEADWALL DIMENSIONS					
	BOX "B"	L	m	# OF BOLTS	s
SINGLE BOX	4'-0"	5'-4"	1'-4"	2	-
	6'-0"	7'-6"	1'-6"	2	-
	8'-0"	10'-0"	1'-8"	2	-
DOUBLE BOX	5'-0"	12'-0"	1'-4"	2	-
	6'-0"	14'-6"	1'-6"	4	4'-9"
	7'-0"	16'-9"	1'-8"	4	5'-9"
	8'-0"	19'-0"	1'-8"	4	6'-8"

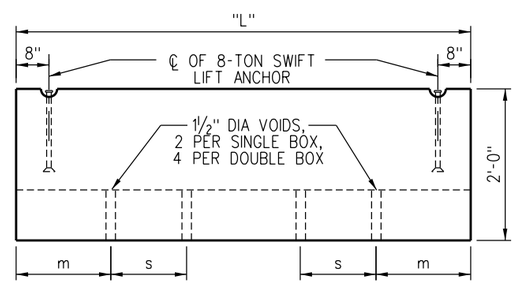

PRECAST HEADWALL-FRONT VIEW

NOTES:

A. SPECIFICATIONS
1. DESIGN: AREMA - 2004 SERVICE LOAD DESIGN
WINGWALL AND HEAD WALL DESIGNED IN ACCORDANCE WITH SECTION 16, CHAPTER 8 OF AREMA MANUAL
2. LOAD COMBINATION: GROUP 1: D + L + I + E
WHERE D = DEAD LOAD, L = LIVE LOAD, E = EARTH LOAD, I = IMPACT

B. LOADINGS:
1. LATERAL LOAD:
- EQUIVALENT FLUID PRESSURE OF 40 PCF.
- UNIFORM LATERAL SURCHARGE PRESSURE OF 570 PSF.
2. MATERIAL PROPERTIES:
- F'C = 4,000 PSI
- FY = 60,000 PSI (REINFORCEMENT)
- N = 7

C. MATERIALS
1. ALL WELDED WIRE REINFORCEMENT SHALL CONFORM TO ASTM A497.
- ALLOWABLE TENSILE STRESS OF 24,000 PSI FOR SERVICE LOAD DESIGN.
2. CONCRETE
- ALL EXPOSED EDGES OF CONCRETE SHALL BE CHAMFERED ¾".
- ALL REINFORCING STEEL SHALL HAVE A MINIMUM 2" COVER.
3. STEEL
- STRUCTURAL STEEL ASTM A572 GRADE 50.
- DEBURR ALL EDGES.
- PAINT EXPOSED PILES WITH ONE PRIME AND ONE FINISH COAT BRIDGE PAINT. PAINT TO EXTEND AT LEAST ONE FOOT BELOW FINISHED GROUND LINE.
- ALL BOLTS SHALL BE A307 GALVANIZED STEEL WITH 2 GALVANIZED WASHERS.
4. PILE DESIGN IS BASED UPON SATURATED SAND WITH COEFFICIENT OF FRICTION - 30°.
- PILES MUST BE DRIVEN CAREFULLY SO THAT ALL ARE PLUMB AND ALIGNED SO THAT THE PRECAST CONCRETE WINGWALL CAN BEAR EVENLY ON FLANGES OF EACH PILE.

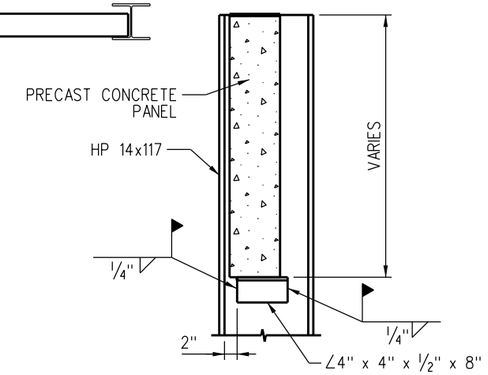

SECTION A

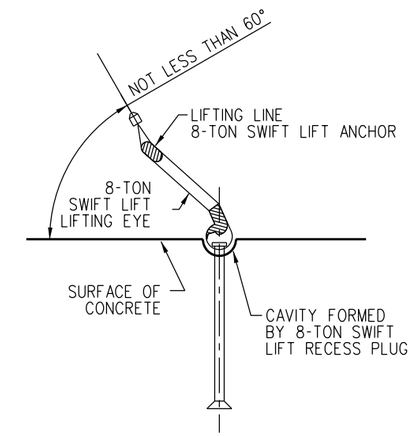

LIFTING DETAIL

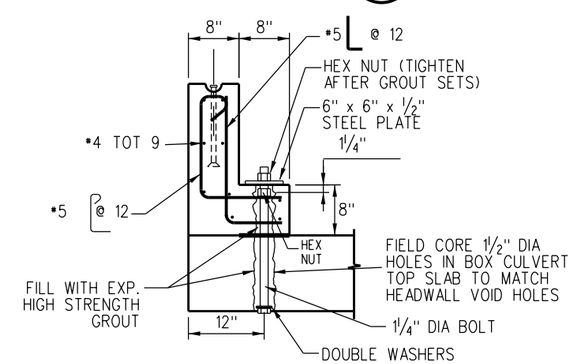

HEADWALL SECTION

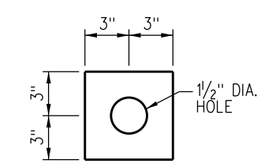

6" x 6" x ½" STEEL PLATE (GALVANIZED)

FOR PANEL AND CULVERT END UNIT DETAILS SEE "STANDARD PRECAST CONCRETE HEADWALL AND WINGWALL DETAILS SHEET 2"

REV.	DATE	DESCRIPTION	DES.	ENG.
X	XX-XX-XX	REVISION	XX	XX

DRAWN BY: A. CARLOS DATE: 03/31/2011

ASSISTANT DIRECTOR: STANDARDS & DESIGN

DIRECTOR OF ENGINEERING AND CONSTRUCTION

METROLINK®
SOUTHERN CALIFORNIA REGIONAL RAIL AUTHORITY
ONE GATEWAY PLAZA, 12TH FLOOR, L. A., CA. 90012

ENGINEERING STANDARDS

GENERAL DETAILS
PRECAST CONCRETE
HEADWALL AND WINGWALL

STANDARD 6003
SCALE: NONE
REVISION –
SHEET 3 OF 4
CADD FILE: ES6003-03

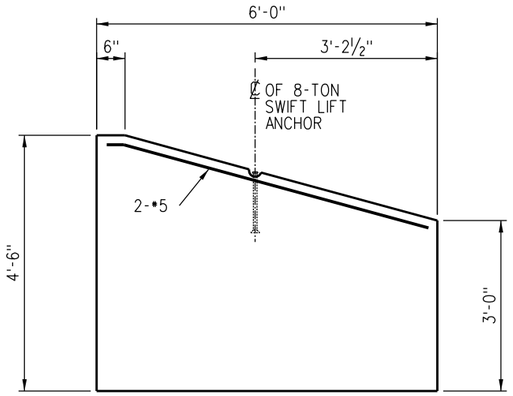

PANEL 1 ELEVATION

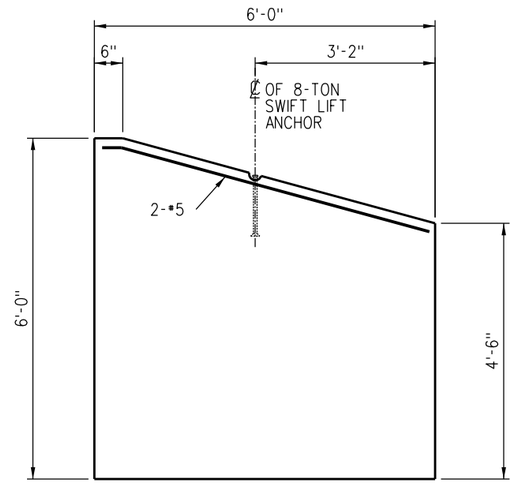

PANEL 2 ELEVATION

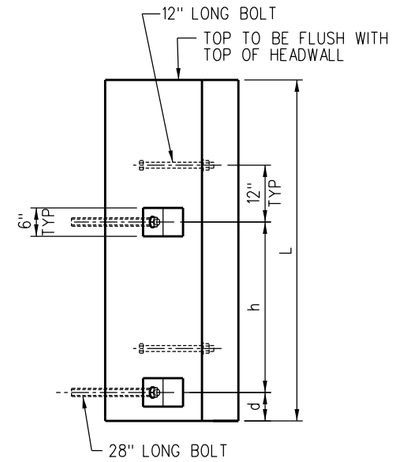

H=2'&3' BOX CULVERT CONNECTION UNIT

NOTES:

A. SPECIFICATIONS
1. DESIGN: AREMA - 2004 SERVICE LOAD DESIGN
WINGWALL AND HEAD WALL DESIGNED IN ACCORDANCE WITH SECTION 16, CHAPTER 8 OF AREMA MANUAL
2. LOAD COMBINATION: GROUP 1: D + L + I + E
WHERE D = DEAD LOAD, L = LIVE LOAD, E = EARTH LOAD, I = IMPACT

B. LOADINGS:
1. LATERAL LOAD:
- EQUIVALENT FLUID PRESSURE OF 40 PCF.
- UNIFORM LATERAL SURCHARGE PRESSURE OF 570 PSF.
2. MATERIAL PROPERTIES:
- F'C = 4,000 PSI
- FY = 60,000 PSI (REINFORCEMENT)
- N = 7

C. MATERIALS
1. ALL WELDED WIRE REINFORCEMENT SHALL CONFORM TO ASTM A497.
- ALLOWABLE TENSILE STRESS OF 24,000 PSIFOR SERVICE LOAD DESIGN.
2. CONCRETE
- ALL EXPOSED EDGES OF CONCRETE SHALL BE CHAMFERED3*4".
- ALL REINFORCING STEEL SHALL HAVE A MINIMUM 2" COVER.
3. STEEL
- STRUCTURAL STEEL ASTM A572 GRADE 50.
- DEBURR ALL EDGES.
- PAINT EXPOSED PILES WITH ONE PRIME AND ONE FINISH COAT BRIDGE PAINT. PAINT TO EXTEND AT LEAST ONE FOOT BELOW FINISHED GROUND LINE.
- ALL BOLTS SHALL BE A307 GALVANIZED STEEL WITH 2 GALVANIZED WASHERS.
4. PILE DESIGN IS BASED UPON SATURATED SAND WITH COEFFICIENT OF FRICTION - 30°.
- PILES MUST BE DRIVEN CAREFULLY SO THAT ALL ARE PLUMB AND ALIGNED SO THAT THE PRECAST CONCRETE WINGWALL CAN BEAR EVENLY ON FLANGES OF EACH PILE.

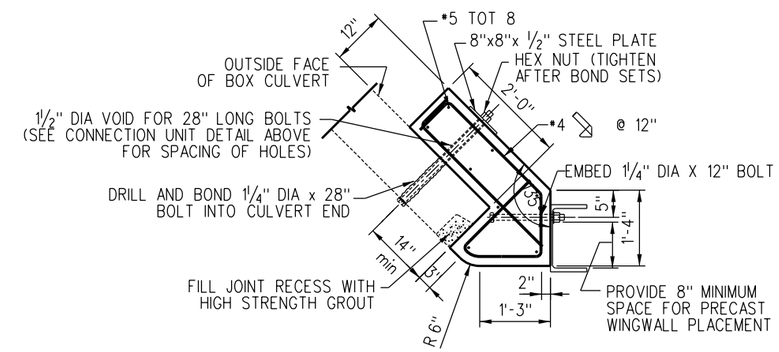

BOX CULVERT CONNECTION UNIT DETAIL

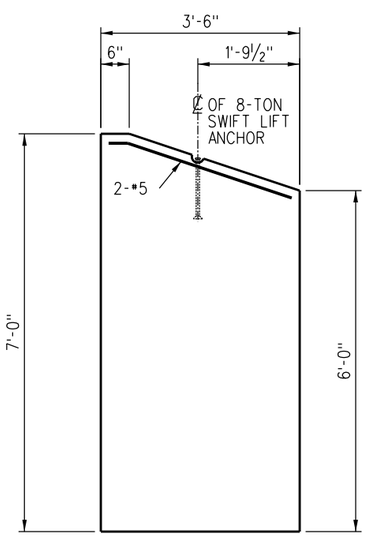

PANEL 3 ELEVATION

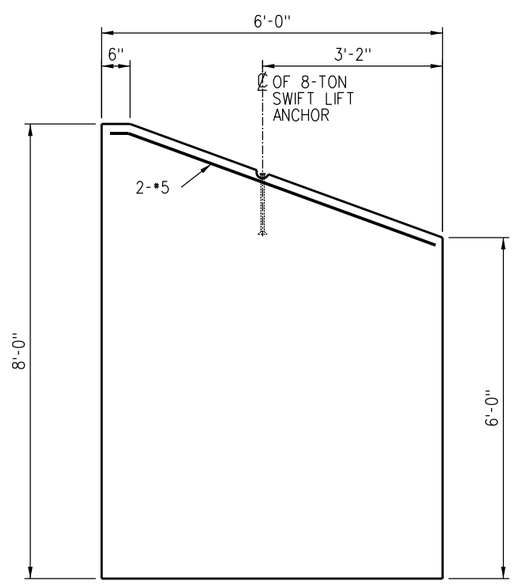

PANEL 4 ELEVATION

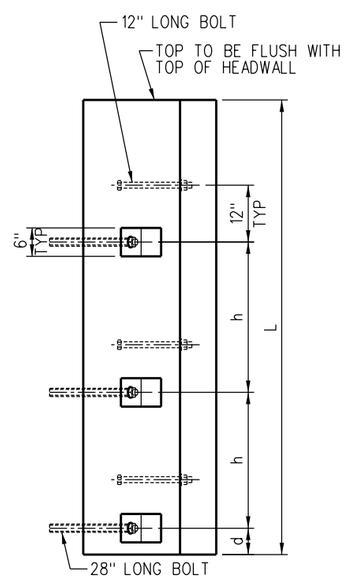

H=4' BOX CULVERT CONNECTION UNIT

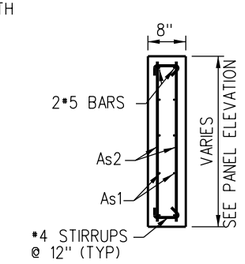

TYPICAL PANEL SECTION

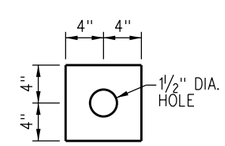

8" x 8" x ½" STEEL PLATE (GALVANIZED)

BOX CULVERT CONNECTION UNIT DIMENSIONS					
BOX "H"	BOX "B"	L	d	# OF 28" BOLTS	h
	4'-0"	5'-4"	4"	2	2'-8"
2'-0"	6'-0"	5'-6"	5"	2	2'-10"
	8'-0"	6'-0"	6"	2	3'-0"
	4'-0"	6'-4"	4"	2	3'-8"
3'-0"	6'-0"	6'-6"	5"	2	3'-10"
	8'-0"	7'-0"	6"	2	4'-0"
	4'-0"	7'-4"	4"	3	2'-3"
4'-0"	6'-0"	7'-6"	5"	3	2'-4"
	8'-0"	8'-0"	6"	3	2'-6"

PANEL REINFORCEMENT		
PANEL	As1 (in2/ft)	As2 (in2/ft)
1	0.40	0.30
2	0.40	0.30
3	0.30	0.30
4	0.40	0.30

REV.	DATE	DESCRIPTION	DES.	ENG.
X	XX-XX-XX	REVISION	XX	XX

DRAWN BY: A. CARLOS DATE: 03/31/2011

ASSISTANT DIRECTOR: STANDARDS & DESIGN

DIRECTOR OF ENGINEERING AND CONSTRUCTION

METROLINK®
SOUTHERN CALIFORNIA REGIONAL RAIL AUTHORITY
ONE GATEWAY PLAZA, 12TH FLOOR, L. A., CA. 90012

ENGINEERING STANDARDS

GENERAL DETAILS
PRECAST CONCRETE
HEADWALL AND WINGWALL

STANDARD 6003
SCALE: NONE
REVISION –
SHEET 4 OF 4
CADD FILE: ES6003-04

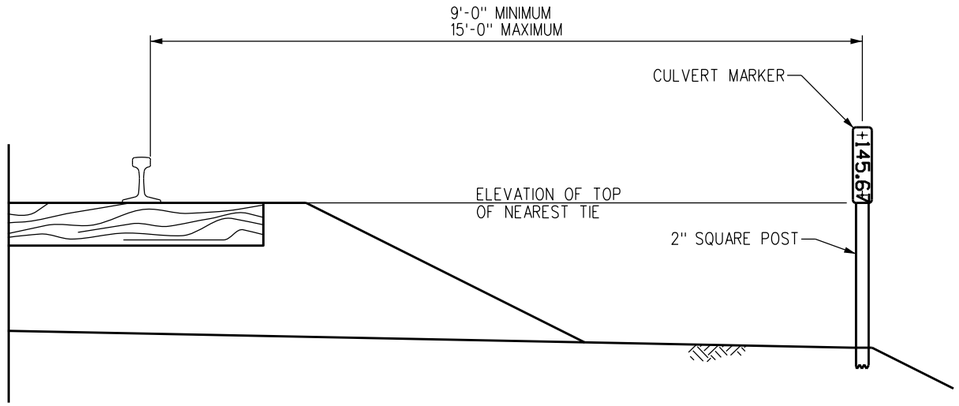

LOCATION PLAN (ELEVATION VIEW)

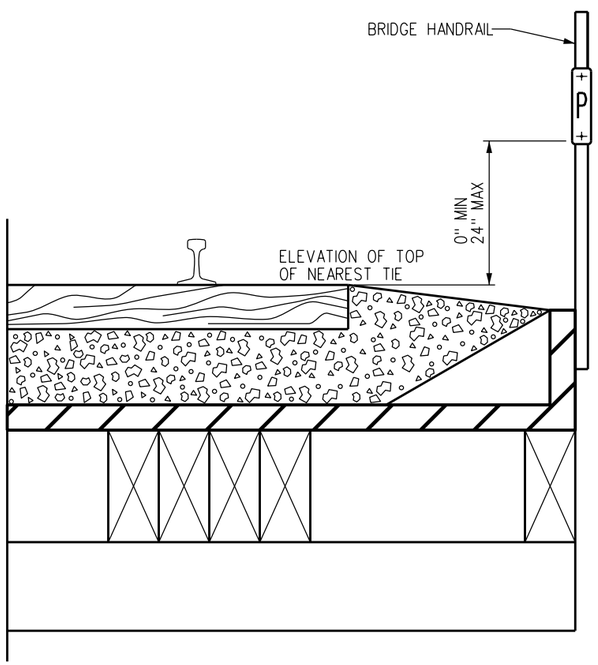

MARKER POST SIGN ON BRIDGE HANDRAIL

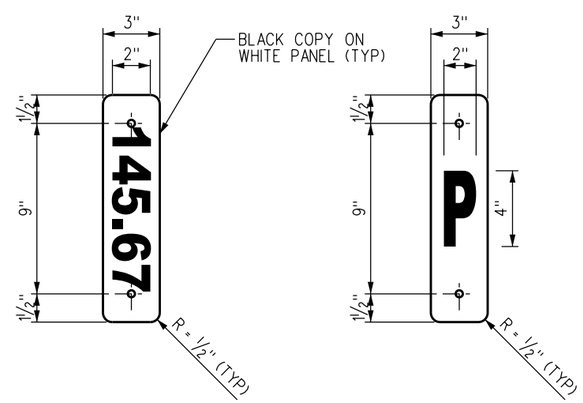

BRIDGE, TRESTLE AND CULVERT MARKER

MARKER POST

MATERIAL SPECIFICATIONS

PRODUCT	SYSTEM	MANUFACTURER AND PRODUCT
HIGH INTENSITY SHEETING (WHITE)	1	3M SCOTCHLITE HIGH INTENSITY PRISMATIC WHITE GRADE 3930 SHEETING
	2	NIPPON CARBIDE RETRO-REFLECTIVE SHEETING TYPE VIII CRYSTAL GRADE
	3	AVERY DENNISON OMNI-VIEW T-9500 PRISMATIC HIGH INTENSITY SHEETING
COPY / GRAPHICS (BLACK)	1	3M PROCESS COLOR SERIES 8851 INK
	2	NIPPON CARBIDE GRAFFITI RESISTANT 3803 INK
	3	AVERY DENNISON 4930 INK
ANTI - GRAFFITI OVERLAY	1	3M PREMIUM PROTECTIVE OVERLAY FILM 1160
	2	NIKKALITE BRAND HI - SCALE F-40801
	3	AVERY DENNISON OL - 1000 PREMIUM ANTI - GRAFFITI FILM
PANEL	1	⅛" THICK ALUMINUM, ALCOA 6016-T6 OR EQUAL
POSTS, ANCHORS & HARDWARE	1	AS PER SCRRA ES5210

INSTALLATION NOTES

1. BRIDGE AND TRESTLE MARKER SHALL BE SET ON FIELD SIDE OF OUTSIDE TRACK AND USED ONLY AT SUCH LOCATIONS AS APPROVED BY SCRRA.
2. CULVERT MARKER SHALL BE INSTALLED AT LOCATIONS WHERE HEADWALL, PORTAL OR CULVERT OPENING IS NOT VISIBLE FROM THE TRACK (SUCH AS CULVERTS IN HIGH FILLS). MARKER SHALL BE PLACED ON RIGHT HAND SIDE WHEN FACING IN THE DIRECTION OF INCREASING MILE POSTS.
3. MARKER POST SHALL BE USED TO INDICATE STRUCTURES PROTECTED BY HIGH WATER DETECTOR. MARKERS SHALL BE PLACED AT EACH END OF STRUCTURE. WHERE STRUCTURE HAS HANDRAIL, MARKER MAY BE PLACED ON ENDPOST OF HANDRAIL.

MATERIAL NOTES:

1. SIGNS SHALL INCLUDE ALUMINUM PANEL, RETROREFLECTIVE SHEETING, POLYURETHANE PAINT, SCREENED-PROCESS COLORS OR FILM, UV PROTECTION OVERLAY, ANTI-GRAFFITI OVERLAY, POSTS, ANCHORS AND HARDWARE.
2. ALUMINUM PANEL SHALL BE ALCOA 6016-T6 OR EQUAL.
3. TEXT FONT SHALL BE 7/32" ARIEL BOLD 9/32" AS PER SCRRA ES1212, SIZE AS INDICATED.
4. POSTS, ANCHORS, AND HARDWARE SHALL BE AS PER SCRRA ES5210.
5. PANEL SHALL BE PAINTED ON ALL SIDES WITH TWO PART ACRYLIC POLYURETHANE PAINT COATING.
6. RETROREFLECTIVE SHEETING SHALL CONFORM TO THE REQUIREMENTS OF ASTM D4956, CLASS IX OR GREATER. RETROREFLECTIVE SHEETING SHALL HAVE CLASS 1, 3, OR 4 ADHESIVE BACKING WHICH SHALL BE PRESSURE SENSITIVE AND FUNGUS RESISTANT.
7. SCREENED-PROCESS COLORS AND NONREFLECTIVE, OPAQUE BLACK FILM SHALL HAVE EQUIVALENT OUTDOOR WEATHERABILITY CHARACTERISTICS AS THE RETROREFLECTIVE SHEETING.

REV.	DATE	DESCRIPTION	DES.	ENG.
A	03-22-13	REVISED MATERIAL SPECIFICATIONS	AC	NDP

DRAWN BY: A. CARLOS DATE: 04/12/02

ASSISTANT DIRECTOR: STANDARDS & DESIGN

DIRECTOR OF ENGINEERING AND CONSTRUCTION

METROLINK®
SOUTHERN CALIFORNIA REGIONAL RAIL AUTHORITY
ONE GATEWAY PLAZA, 12TH FLOOR, L. A., CA. 90012

ENGINEERING STANDARDS

BRIDGE, TRESTLE AND CULVERT NUMBER MARKER

STANDARD 6101
SCALE: NTS
REVISION A SHEET 1 OF 1
CADD FILE: ES6101

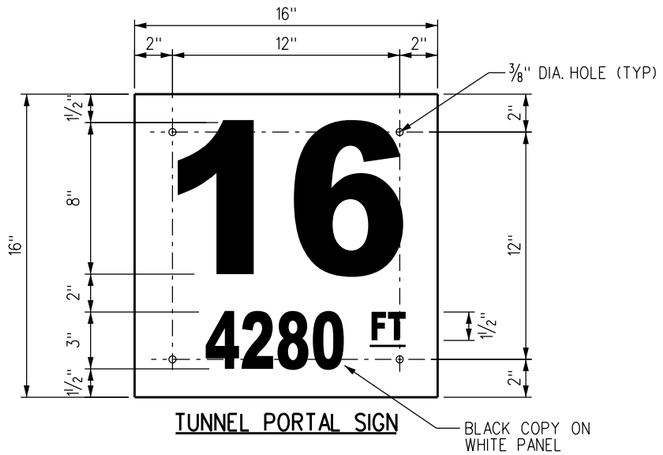

TUNNEL PORTAL SIGN

MATERIAL NOTES:

1. SIGNS SHALL INCLUDE ALUMINUM PANEL, RETROREFLECTIVE SHEETING, POLYURETHANE PAINT, SCREENED-PROCESS COLORS OR FILM, UV PROTECTION OVERLAY, ANTI-GRAFFITI OVERLAY, ANCHORS AND HARDWARE.
2. ALUMINUM PANEL SHALL BE ALCOA 6016-T6 OR EQUAL.
3. TEXT FONT SHALL BE 7/32" ARIEL BOLD 9/32" AS PER SCRRA ES1212, SIZE AS INDICATED.
4. PANEL SHALL BE PAINTED ON ALL SIDES WITH TWO PART ACRYLIC POLYURETHANE PAINT COATING.
5. RETROREFLECTIVE SHEETING SHALL CONFORM TO THE REQUIREMENTS OF ASTM D4956, CLASS IX OR GREATER. RETROREFLECTIVE SHEETING SHALL HAVE CLASS 1, 3, OR 4 ADHESIVE BACKING WHICH SHALL BE PRESSURE SENSITIVE AND FUNGUS RESISTANT.
6. SCREENED-PROCESS COLORS AND NONREFLECTIVE, OPAQUE BLACK FILM SHALL HAVE EQUIVALENT OUTDOOR WEATHERABILITY CHARACTERISTICS AS THE RETROREFLECTIVE SHEETING.

MATERIAL SPECIFICATIONS

PRODUCT	SYSTEM	MANUFACTURER AND PRODUCT
HIGH INTENSITY SHEETING (WHITE)	1	3M SCOTCHLITE HIGH INTENSITY PRISMATIC WHITE GRADE 3930 SHEETING
	2	NIPPON CARBIDE RETRO-REFLECTIVE SHEETING TYPE VIII CRYSTAL GRADE
	3	AVERY DENNISON OMNI-VIEW T-9500 PRISMATIC HIGH INTENSITY SHEETING
COPY / GRAPHICS (BLACK)	1	3M PROCESS COLOR SERIES 8851 INK
	2	NIPPON CARBIDE GRAFFITI RESISTANT 3803 INK
	3	AVERY DENNISON 4930 INK
ANTI - GRAFFITI OVERLAY	1	3M PREMIUM PROTECTIVE OVERLAY FILM 1160
	2	NIKKALITE BRAND HI - SCALE F-40801
	3	AVERY DENNISON OL - 1000 PREMIUM ANTI - GRAFFITI FILM
EXPANSION ANCHOR	-	HILTI KWIK BOLT KB 1/2" DIA. x 2" LONG THREAD W/ HEX NUT HDG No. 00378085
	-	RED HEAD TRUBOLT HDG WEDGE TYPE ANCHOR 1/2" DIA. x 2" LONG No. WS-1254G
PANEL	1	1/8" THICK ALUMINUM, ALCOA 6016-T6 OR EQUAL

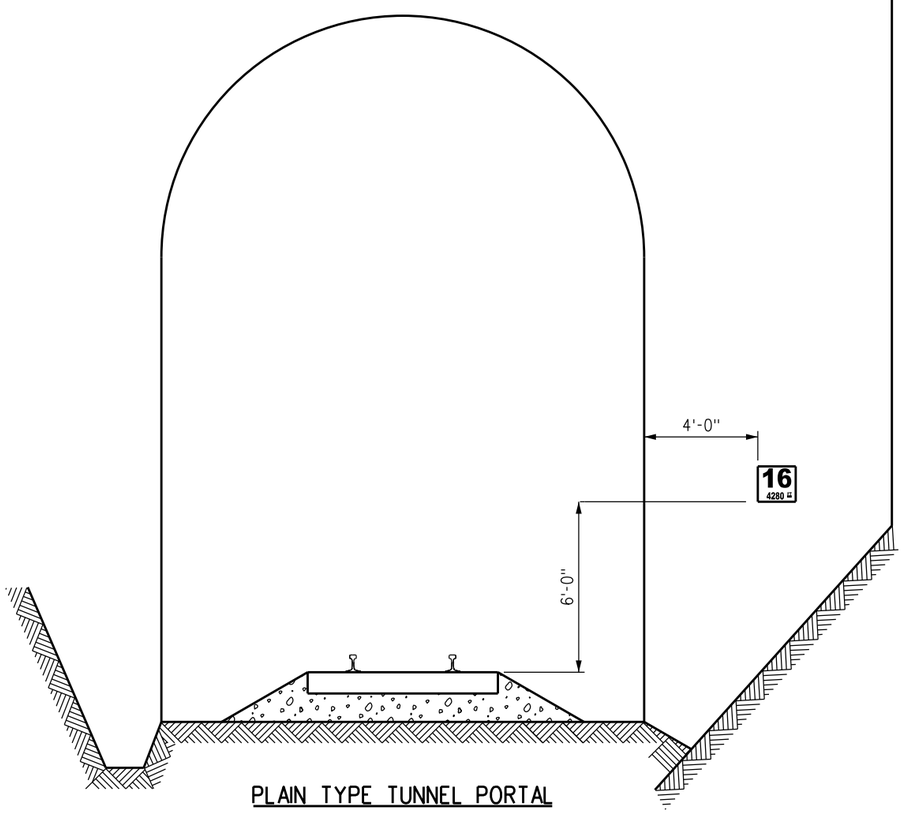

PLAIN TYPE TUNNEL PORTAL

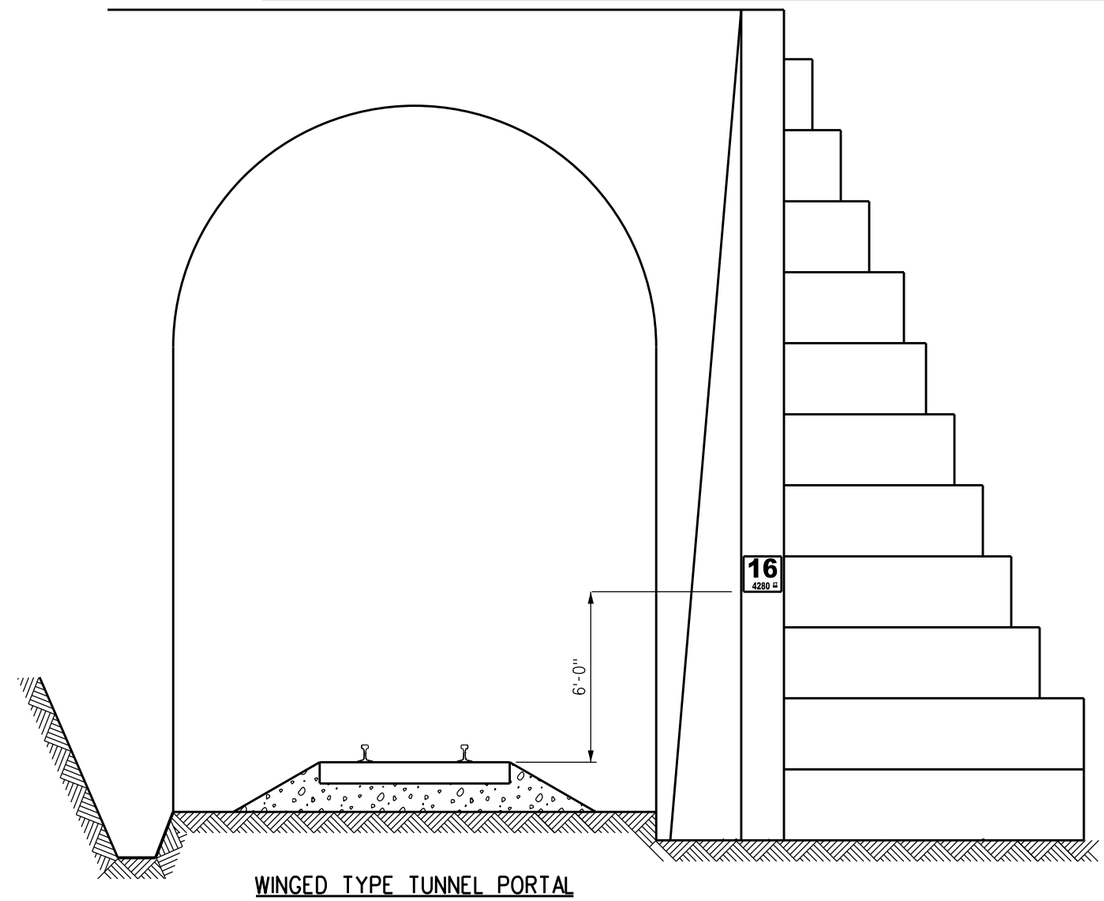

WINGED TYPE TUNNEL PORTAL

REV.	DATE	DESCRIPTION	DES.	ENG.
A	03-22-13	REVISION	AC	NDP

DRAWN BY: A. CARLOS DATE: 04/12/02

ASSISTANT DIRECTOR: STANDARDS & DESIGN

DIRECTOR OF ENGINEERING AND CONSTRUCTION

METROLINK®

SOUTHERN CALIFORNIA REGIONAL RAIL AUTHORITY
ONE GATEWAY PLAZA, 12TH FLOOR, L. A., CA. 90012

ENGINEERING STANDARDS

TUNNEL NUMBERS

STANDARD 6102
SCALE: NTS
REVISION A SHEET 1 OF 1
CADD FILE: ES6102

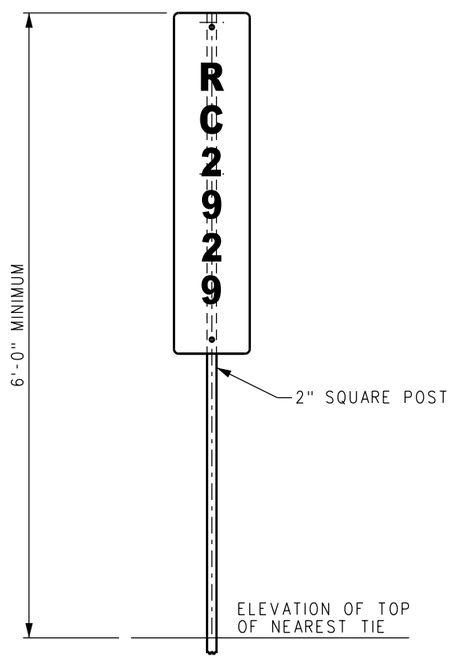

BEGIN CHANNEL SIGN

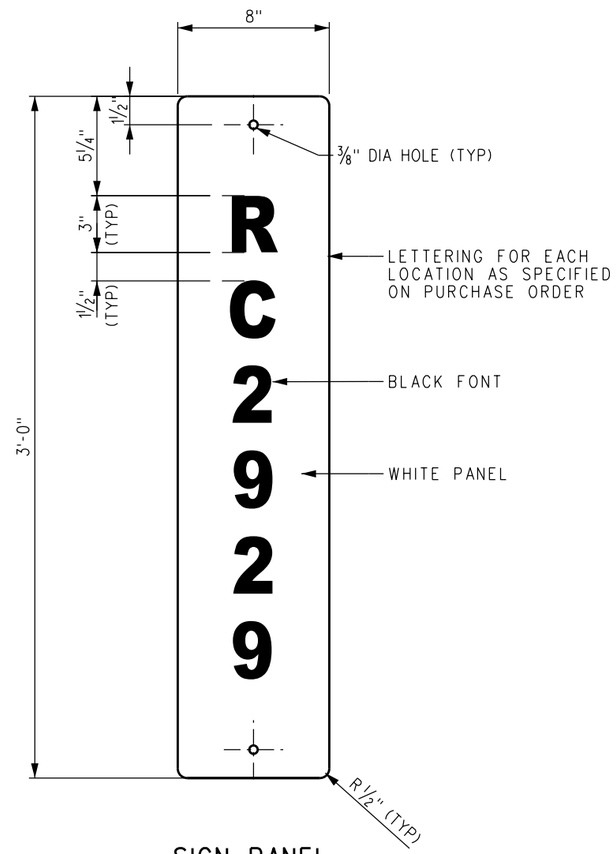

SIGN PANEL

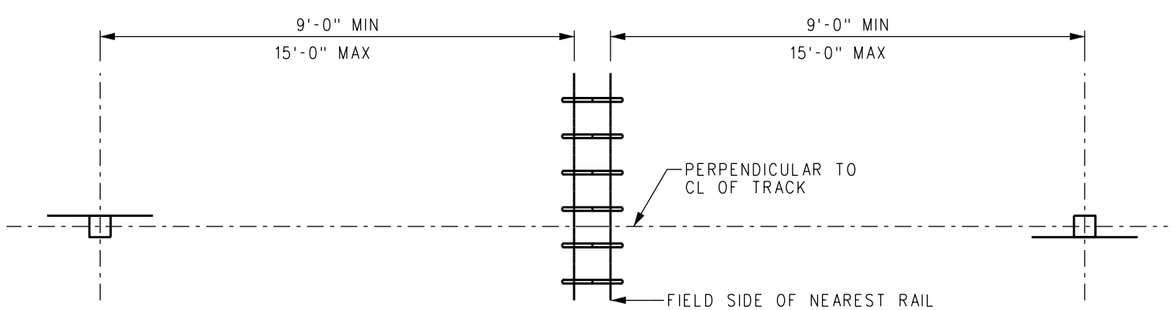

LOCATION PLAN

MATERIAL SPECIFICATIONS

PRODUCT	SYSTEM	MANUFACTURER AND PRODUCT
HIGH INTENSITY SHEETING (WHITE)	1	AVERY DENNISON OMNI-CUBE T-11500
	2	3M-DG3-4090
COPY / GRAPHICS (BLACK)	1	AVERY DENNISON BLACK VINYL OL-2000 OR 4930 INK
	2	3M-EC FILM 1178 OR 8851 INK
ANTI - GRAFFITI OVERLAY	1	NIPPON CARBIDE: F-CAL
	2	AVERY DENNISON OL - 1000 PREMIUM ANTI - GRAFFITI FILM
	3	3M PREMIUM PROTECTIVE OVERLAY FILM - 1160
PANEL	1	⅛" THICK ALUMINUM, ALCOA 6016-T6 OR EQUAL
POSTS, ANCHORS & HARDWARE	1	AS PER SCRRA ES5210

INSTALLATION NOTES

1. SIGNS SHALL BE LOCATED ON THE RIGHT HAND SIDE AND SHALL FACE IN THE DIRECTION OF APPROACH.
2. THE POST SHALL BE SET PER THE LOCATION PLAN ON THIS SHEET. EXCEPTIONS SHALL REQUIRE THE APPROVAL OF SCRRA.

MATERIAL NOTES:

1. SIGNS SHALL INCLUDE ALUMINUM PANEL, RETROREFLECTIVE SHEETING, POLYURETHANE PAINT, SCREENED-PROCESS COLORS OR FILM, UV PROTECTION OVERLAY, ANTI-GRAFFITI OVERLAY, POSTS, ANCHORS AND HARDWARE.
2. ALUMINUM PANEL SHALL BE ALCOA 6016-T6 OR EQUAL.
3. TEXT FONT SHALL BE 7/32" ARIEL BOLD 9/32" AS PER SCRRA ES1212, SIZE AS INDICATED.
4. POSTS, ANCHORS, AND HARDWARE SHALL BE AS PER SCRRA ES5210.
5. PANEL SHALL BE PAINTED ON ALL SIDES WITH TWO PART ACRYLIC POLYURETHANE PAINT COATING.
6. RETROREFLECTIVE SHEETING SHALL CONFORM TO THE REQUIREMENTS OF ASTM D4956, CLASS IX OR GREATER. RETROREFLECTIVE SHEETING SHALL HAVE CLASS 1, 3, OR 4 ADHESIVE BACKING WHICH SHALL BE PRESSURE SENSITIVE AND FUNGUS RESISTANT.
7. SCREENED-PROCESS COLORS AND NONREFLECTIVE, OPAQUE BLACK FILM SHALL HAVE EQUIVALENT OUTDOOR WEATHERABILITY CHARACTERISTICS AS THE RETROREFLECTIVE SHEETING.

REV.	DATE	DESCRIPTION	DES.	ENG.
B	03-22-13	REVISED MATERIAL SPECIFICATIONS	AC	NDP
A	8-31-12	REVISED SIGN AND TITLE	AC	NDP

DRAWN BY: HDR DATE: 03/31/2011

ASSISTANT DIRECTOR: STANDARDS & DESIGN

DIRECTOR OF ENGINEERING AND CONSTRUCTION

METROLINK®
SOUTHERN CALIFORNIA REGIONAL RAIL AUTHORITY
ONE GATEWAY PLAZA, 12TH FLOOR, L. A., CA. 90012

ENGINEERING STANDARDS

RADIO CHANNEL SIGN

STANDARD 6103
SCALE: NTS
REVISION B SHEET 1 OF 1
CADD FILE: ES6103

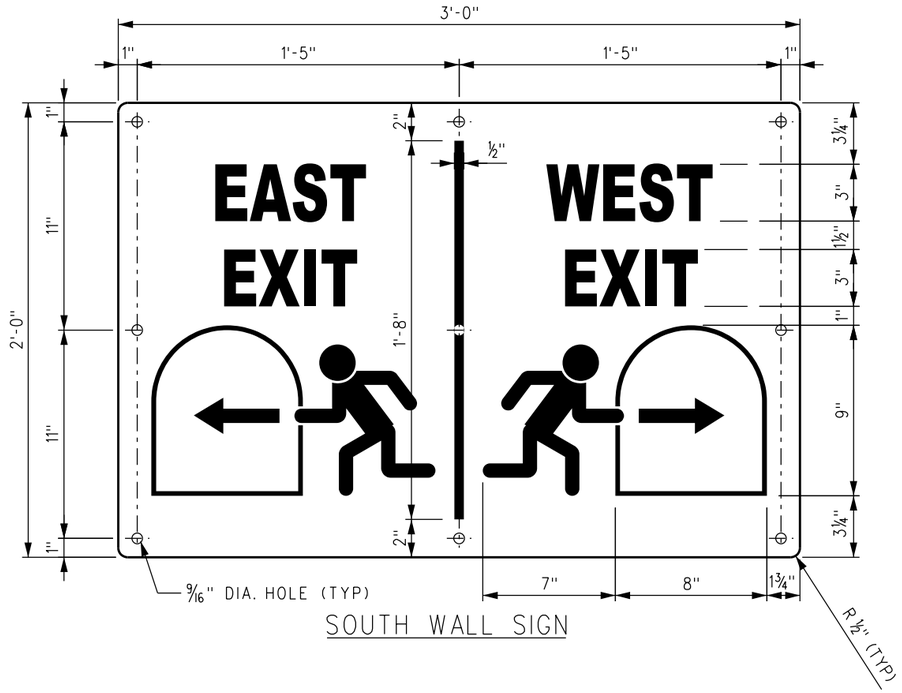

SOUTH WALL SIGN

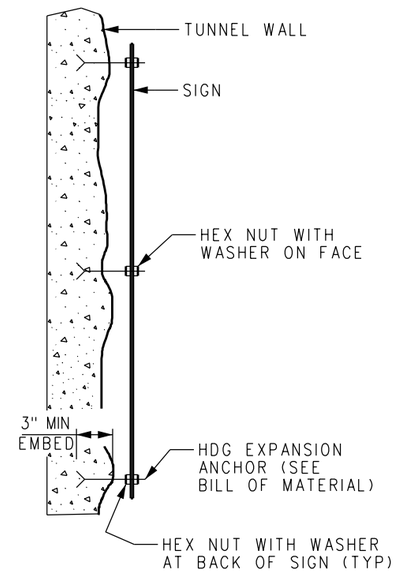

MOUNTING ON
UNEVEN SURFACE

MATERIAL SPECIFICATIONS		
PRODUCT	SYSTEM	MANUFACTURER AND PRODUCT
HIGH INTENSITY SHEETING (WHITE)	1	3M SCOTCHLITE HIGH INTENSITY PRISMATIC WHITE GRADE 3930 SHEETING
	2	NIPPON CARBIDE RETRO-REFLECTIVE SHEETING TYPE VIII CRYSTAL GRADE
	3	AVERY DENNISON OMNI-VIEWT-9500 PRISMATIC HIGH INTENSITY SHEETING
COPY / GRAPHICS (BLACK)	1	3M PROCESS COLOR SERIES 8851 INK
	2	NIPPON CARBIDE GRAFFITI RESISTANT 3803 INK
	3	AVERY DENNISON 4930 INK
ANTI - GRAFFITI OVERLAY	1	3M PREMIUM PROTECTIVE OVERLAY FILM 1160
	2	NIKKALITE BRAND HI - SCALE F-40801
	3	AVERY DENNISON OL - 1000 PREMIUM ANTI - GRAFFITI FILM
EXPANSION ANCHOR	-	HILTI KWIK BOLT KB ½" DIA. x 5½", LONG THREAD W/ HEX NUT HDG No. 00378085
	-	RED HEAD TRUBOLT HDG WEDGE TYPE ANCHOR ½" DIA x 5½" LONG No. WS-1254G
PANEL	1	⅛" THICK ALUMINUM, ALCOA 6016-T6 OR EQUAL

INSTALLATION NOTES

1. MOUNT SIGNS TO TUNNEL WALL USING HOT DIPPED GALVANIZED CONCRETE EXPANSION ANCHORS.
2. EXPANSION ANCHORS MUST BE INSTALLED IN ACCORDANCE WITH THE REQUIREMENTS OF THE MANUFACTURER.
3. INCREASE EMBEDMENT OF EXPANSION ANCHOR TO 4 INCHES WHEN MOUNTING ON SMOOTH SURFACE.
4. USE WASHERS WITH 2" MINIMUM O.D. ON BOTH FACES OF SIGN FOR ALL MOUNTING CONDITIONS.
5. MOUNT BOTTOM OF SIGN A MINIMUM OF 8'-0" ABOVE TOP OF RAIL.
6. PLACE SIGNS ON BOTH SIDES OF TUNNEL SPACED AT NOT MORE THAN 100 FEET BETWEEN SIGNS, STAGGERED.

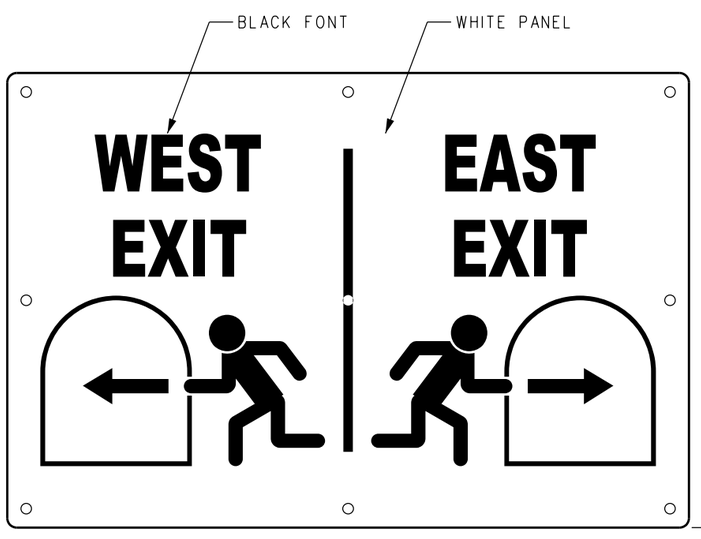

NORTH WALL SIGN

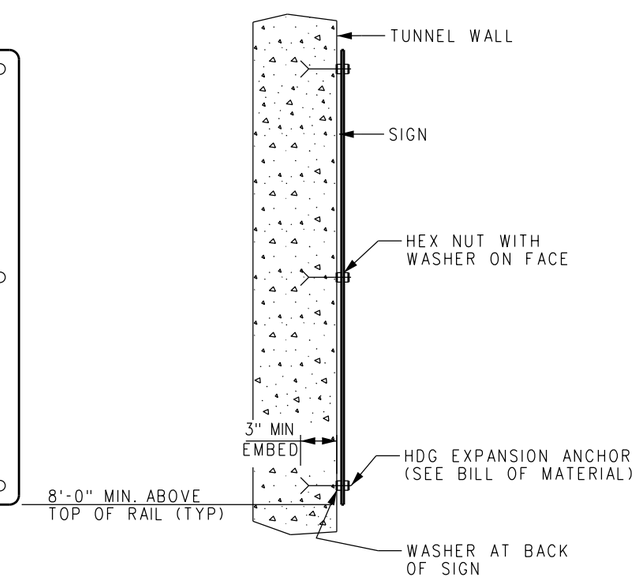

MOUNTING ON
SMOOTH SURFACE

MATERIAL NOTES:

1. SIGNS SHALL INCLUDE ALUMINUM PANEL, RETROREFLECTIVE SHEETING, POLYURETHANE PAINT, SCREENED-PROCESS COLORS OR FILM, UV PROTECTION OVERLAY, ANTI-GRAFFITI OVERLAY, POSTS, ANCHORS AND HARDWARE.
2. ALUMINUM PANEL SHALL BE ALCOA 6016-T6 OR EQUAL.
3. TEXT FONT SHALL BE 7⁄32" ARIEL BOLD 9⁄32" AS PER SCRRA ES1212, SIZE AS INDICATED.
4. PANEL SHALL BE PAINTED ON ALL SIDES WITH TWO PART ACRYLIC POLYURETHANE PAINT COATING.
5. RETROREFLECTIVE SHEETING SHALL CONFORM TO THE REQUIREMENTS OF ASTM D4956, CLASS IX OR GREATER. RETROREFLECTIVE SHEETING SHALL HAVE CLASS 1, 3, OR 4 ADHESIVE BACKING WHICH SHALL BE PRESSURE SENSITIVE AND FUNGUS RESISTANT.
6. SCREENED-PROCESS COLORS AND NONREFLECTIVE, OPAQUE BLACK FILM SHALL HAVE EQUIVALENT OUTDOOR WEATHERABILITY CHARACTERISTICS AS THE RETROREFLECTIVE SHEETING.

REV.	DATE	DESCRIPTION	DES.	ENG.
A	03-22-13	REVISED MATERIAL SPECIFICATIONS	AC	NDP

DRAWN BY: A. CARLOS DATE: 03/12/2012

ASSISTANT DIRECTOR: STANDARDS & DESIGN

DIRECTOR OF ENGINEERING AND CONSTRUCTION

METROLINK®
SOUTHERN CALIFORNIA REGIONAL RAIL AUTHORITY
ONE GATEWAY PLAZA, 12TH FLOOR, L. A., CA. 90012

ENGINEERING STANDARDS

TUNNEL EXIT SIGN

STANDARD 6104
SCALE: 3" = 1'-0"
REVISION A SHEET 1 OF 1
CADD FILE: ES6104

GENERAL NOTES:

1. ALL WORK REQUIREMENTS SHOWN ON THESE DRAWINGS SHALL BE ACCOMPLISHED AS SPECIFIED IN THE MOST CURRENT AMERICAN RAILWAY ENGINEERING AND MAINTENANCE-OF-WAY ASSOCIATION (AREMA) MANUAL FOR RAILWAY ENGINEERING AND SCRRA STANDARD SPECIFICATIONS.
2. CAST-IN-PLACE CONCRETE HAS BEEN DESIGNED IN ACCORDANCE WITH THE AREMA MANUAL, CHAPTER 8 - CONCRETE STRUCTURES AND FOUNDATIONS.
3. TYPE A HEADWALLS HAVE BEEN DESIGNED FOR ACTIVE EARTH PRESSURE AND E-80 RAILROAD LIVE LOAD SURCHARGE AT NO CLOSER THAN 12'-0" FROM THE CENTERLINE OF THE NEAREST TRACK TO THE BACK FACE OF THE HEADWALL.

HANDRAIL POLICY:

PROVIDE HANDRAIL FOR HEADWALLS PER SHEETS ES6330-01 AND ES6330-02 IF IT MEETS EITHER OF THE FOLLOWING CRITERIA:

1. HEADWALL HEIGHT (H) IS EQUAL TO OR GREATER THAN 4'-0".
2. HEADWALL IS WITHIN 20 FEET OF THE NEAREST TRACK

NOTES:

1. CSP = CORRUGATED STEEL PIPE
   RCP = REINFORCED CONCRETE PIPE
   SPP = STRUCTURAL PLATE PIPE
   SSP = SMOOTH STEEL PIPE
2. TYPE A HEADWALLS FOR STEEL PIPE CULVERTS UP TO 72" DIAMETER INCLUDE TYPE A-1 HEADWALLS FOR A SINGLE PIPE, TYPE A-2 HEADWALLS FOR TWO PIPES, TYPE A-3 HEADWALLS FOR THREE PIPES AND TYPE A-M HEADWALLS FOR MULTIPLE PIPES.

CAST-IN-PLACE CONCRETE NOTES:

CONCRETE:

1. ALL CONCRETE MATERIAL, PLACEMENT AND WORKMANSHIP SHALL BE IN ACCORDANCE WITH SCRRA STANDARD SPECIFICATION 34 80 43. PRECAST PRESTRESSED CONCRETE FOR RAILROAD BRIDGES.
2. COMPRESSIVE STRENGTH - 4000 LB. PER SQUARE INCH AT 28 DAYS.
3. EXPOSED SURFACES SHALL BE FORMED IN A MANNER THAT WILL PRODUCE A SMOOTH AND UNIFORM APPEARANCE WITHOUT RUBBING OR PLASTERING. EXPOSED EDGES OF 90 DEGREES OR LESS ARE TO BE CHAMFERED ¾" X ¾". TOP SURFACE TO HAVE A SMOOTH FINISH, FREE OF ALL FLOAT OR TROWEL MARKS.
4. CONCRETE SHALL BE PROPORTIONED SUCH THAT THE WATER - CEMENT RATIO (BY WEIGHT) DOES NOT EXCEED 0.45. CONCRETE MUST CONTAIN A MINIMUM OF 6 ½ SACKS OF CEMENT PER CUBIC YARD OF CONCRETE.
5. CEMENT SHALL BE TYPE I, TYPE II OR TYPE III PORTLAND CEMENT.
6. AGGREGATES SHALL BE GRADED IN ACCORDANCE WITH ASTM C33.
7. COARSE AGGREGATE SHALL BE SIZE NO. 67.
8. FINE AGGREGATE SHALL BE NATURAL SAND.
9. AIR CONTENT SHALL BE BETWEEN 5% AND 7% (BY VOLUME).
10. ADMIXTURES SHALL NOT BE USED WITHOUT APPROVAL BY THE RAILROAD.
11. CURING SHALL BE ACCOMPLISHED BY WET CURING OR MEMBRANE CURING COMPOUND. MEMBRANE CURING COMPOUND SHALL CONFORM TO ASTM C309 TYPE 2.

REINFORCING STEEL:

1. REINFORCING STEEL SHALL BE DEFORMED, NEW BILLET BARS PER CURRENT ASTM A615 SPECIFICATIONS AND MEET GRADE 60 REQUIREMENTS.
2. FABRICATION OF REINFORCING STEEL SHALL BE PER CHAPTER 7 OF THE CRSI MANUAL OF STANDARD PRACTICE. DIMENSIONS OF BENDING DETAILS ARE OUT TO OUT OF BAR.
3. REINFORCING STEEL IS TO BE BLOCKED AND TIED TO PROPER LOCATION AND SECURELY WIRED AGAINST DISPLACEMENT. TIE WIRES ARE TO BE INSTALLED AT EVERY OTHER BAR INTERSECTION SO THAT AT LEAST FIFTY PERCENT OF THE INTERSECTIONS ARE TIED. TACK WELDING OF REINFORCING IS PROHIBITED. MINIMUM CONCRETE COVER ON REINFORCING NOT OTHERWISE NOTED SHALL MEET CURRENT AREMA MANUAL FOR RAILWAY ENGINEERING REQUIREMENTS.

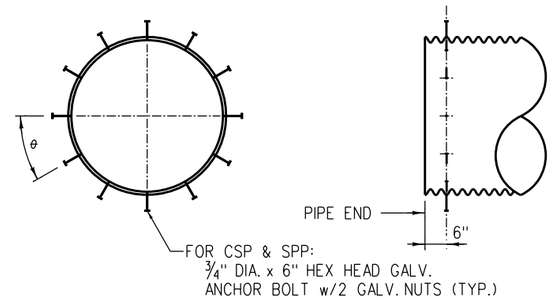

END ANCHOR LOCATION DETAIL
SCALE: NONE

END ANCHOR DATA		
PIPE DIAMETER	ANGLE θ	NO. OF ANCHORS
12" TO 36"	90°	4
37" TO 60"	45°	8
61" TO 72"	30°	12

NOTE:
END ANCHORS SHALL BE USED FOR ALL STEEL PIPE CULVERTS.

CONCRETE HEADWALL TABLE FOR COMMON PIPE SIZES	
MAXIMUM DIAMETER OF STEEL PIPE (D)	TYPE A HEADWALL
24"	H = 3'-6"
30"	H = 4'-0"
36"	H = 4'-6"
48"	H = 5'-6"
60"	H = 6'-6"
72"	H = 7'-6"

REV.	DATE	DESCRIPTION	DES.	ENG.
B	09-14-16	REVISE HANDRAIL POLICY NOTES	AC	NDP
A	07-10-15	REVISE NOTE 1	AC	NDP

DRAWN BY: SCRRA DATE: 03/31/2011

ASSISTANT DIRECTOR: STANDARDS & DESIGN

DIRECTOR OF ENGINEERING AND CONSTRUCTION

METROLINK®
SOUTHERN CALIFORNIA REGIONAL RAIL AUTHORITY
ONE GATEWAY PLAZA, 12TH FLOOR, L. A., CA. 90012

ENGINEERING STANDARDS

END TREATMENTS FOR PIPE CULVERTS
GENERAL NOTES

STANDARD 6301
SCALE: NONE
REVISION B
SHEET 1 OF 1
CADD FILE: ES6301

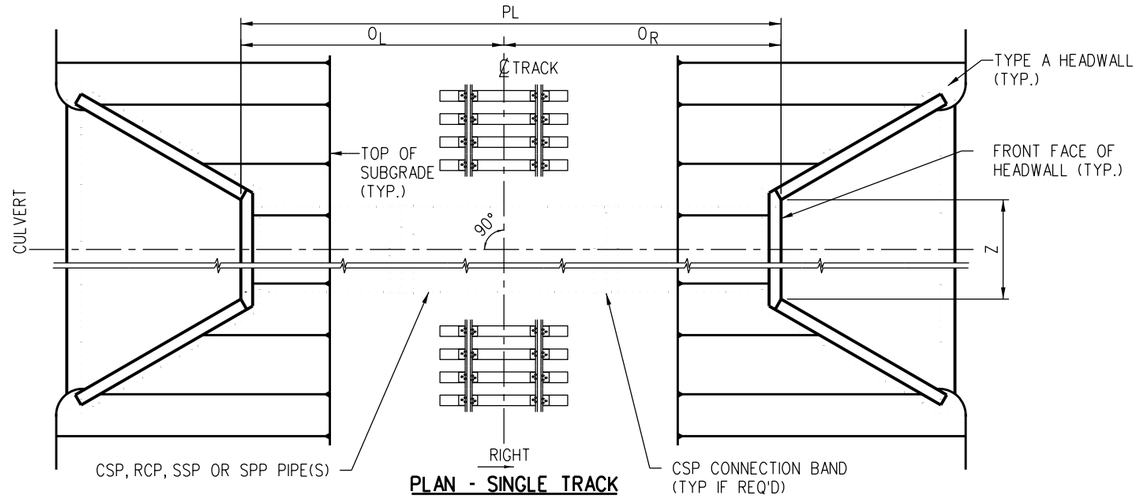

PLAN - SINGLE TRACK

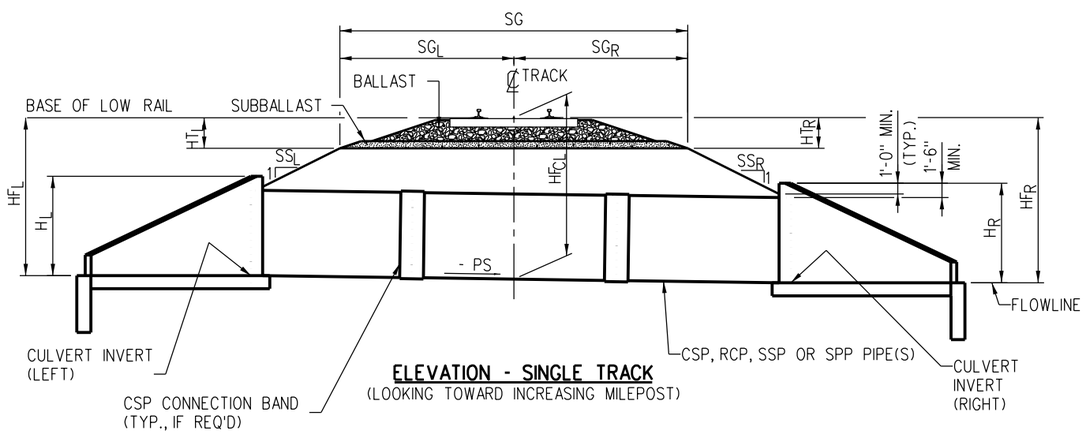

ELEVATION - SINGLE TRACK
(LOOKING TOWARD INCREASING MILEPOST)

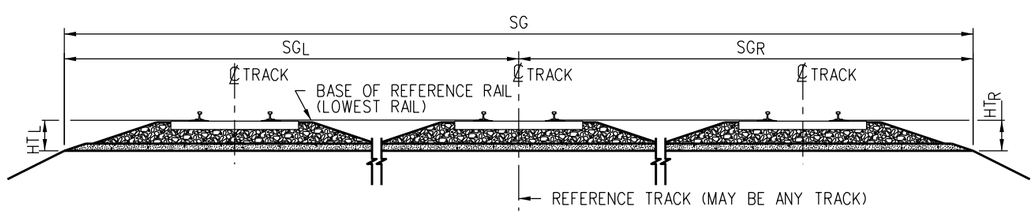

MULTIPLE TRACK DIAGRAM
(LOOKING TOWARD INCREASING MILEPOST)

KEY:

P_L	= PIPE LENGTH
O_L	= OFFSET LEFT
O_R	= OFFSET RIGHT
P_S	= PIPE SLOPE (RISE/RUN) LEFT TO RIGHT (+ UP, - DOWN)
HT_L	= BASE OF LOW RAIL TO TOP OF SUBGRADE LEFT EDGE
HT_R	= BASE OF LOW RAIL TO TOP OF SUBGRADE RIGHT EDGE
HF_{CL}	= HEIGHT - BASE OF LOW RAIL TO FLOWLINE AT CENTERLINE OF TRACK
HF_L	= HEIGHT - BASE OF LOW RAIL TO INVERT LEFT OF TRACK
HF_R	= HEIGHT - BASE OF LOW RAIL TO INVERT RIGHT OF TRACK
HF_{AVG}	= AVERAGE HEIGHT - BASE OF LOW RAIL TO FLOWLINE
H	= HEIGHT OF HEADWALL
H_L	= HEIGHT OF HEADWALL LEFT OF TRACK
H_R	= HEIGHT OF HEADWALL RIGHT OF TRACK
SG	= WIDTH OF SUBGRADE (24'-0" MINIMUM)
SG_L	= WIDTH OF SUBGRADE LEFT OF ` TRACK (12'-0" MINIMUM)
SG_R	= WIDTH OF SUBGRADE RIGHT OF ` TRACK (12'-0" MINIMUM)
SS_L	= SIDE SLOPE LEFT OF TRACK (RUN PER FOOT OF RISE)
SS_R	= SIDE SLOPE RIGHT OF TRACK (RUN PER FOOT OF RISE)
Z	= WIDTH OF THE FRONT FACE OF THE HEADWALL

CULVERT LENGTH EQUATION (TYPE A HEADWALLS)

$$PL = O_L + O_R \geq SG + 2'$$

$$O_L = SG_L + SS_L \times (HF_L - HT_L - H_L + 1') + 1'$$

$$O_R = SG_R + SS_R \times (HF_R - HT_R - H_R + 1') + 1'$$

$$HF_L = HF_{CL} + \frac{PS \times [SG_L - SS_L \times (HT_L + H_L - 1') + 1']}{[1 - (PS \times SS_L)]}$$

$$HF_R = HF_{CL} - \frac{PS \times [SG_R - SS_R \times (HT_R + H_R - 1') + 1']}{[1 + (PS \times SS_R)]}$$

$$SG = SG_L + SG_R$$

$$HF_{AVG} = (HF_L + HF_R) / 2$$

NOTE:

EQUATIONS REQUIRE DIMENSIONS TO BE IN FEET.

NOTES:

1. CSP = CORRUGATED STEEL PIPE
   RCP = REINFORCED CONCRETE PIPE
   SPP = STRUCTURAL PLATE PIPE
   SSP = SMOOTH STEEL PIPE
2. TYPE A HEADWALLS FOR STEEL PIPE CULVERTS UP TO 72" DIAMETER INCLUDE TYPE A-1 HEADWALLS FOR A SINGLE PIPE, TYPE A-2 HEADWALLS FOR TWO PIPES, TYPE A-3 HEADWALLS FOR THREE PIPES AND TYPE A-M HEADWALLS FOR MULTIPLE PIPES.

REV.	DATE	DESCRIPTION	DES.	ENG.
A	07-10-15	ADDED RCP TO SINGLE TRACK PLAN, ELEVATION AND NOTES	AC	NDP

DRAWN BY: SCRRA DATE: 03/31/2011

ASSISTANT DIRECTOR: STANDARDS & DESIGN

DIRECTOR OF ENGINEERING AND CONSTRUCTION

METROLINK®
SOUTHERN CALIFORNIA REGIONAL RAIL AUTHORITY
ONE GATEWAY PLAZA, 12TH FLOOR, L. A., CA. 90012

ENGINEERING STANDARDS

GENERAL ARRANGEMENT FOR TYPE A HEADWALLS

STANDARD 6302
SCALE: NONE
REVISION A
SHEET 1 OF 2
CADD FILE: ES6302-01

CULVERT PIPE LENGTHS, PL (FT) FOR TYPE A HEADWALLS

H = 3'-6" D= 24"	H = 4'-6" D= 24" TO 36"	H = 5'-6" D= 24" TO 48"	H = 6'-6" D=24" TO 60"	H = 7'-6" D=24" TO 72"	SINGLE TRACK SIDE SLOPE			15' TRACK CENTERS SIDE SLOPE			20' TRACK CENTERS SIDE SLOPE		
HF AVG (FT)	HF AVG (FT)	HF AVG (FT)	HF AVG (FT)	HF AVG (FT)	1.5:1	2.0:1	3.0:1	1.5:1	2.0:1	3.0:1	1.5:1	2.0:1	3.0:1
4	5	6	7	8	32	32	32	48	48	48	54	54	54
5	6	7	8	9	34	34	36	50	50	50	56	56	56
6	7	8	9	10	38	38	42	52	54	56	58	60	62
7	8	9	10	11	40	42	48	56	58	62	62	64	68
8	9	10	11	12	44	46	54	58	62	68	64	68	74
9	10	11	12	13	46	50	60	62	66	74	68	72	80
10	11	12	13	14	50	54	66	64	70	80	70	76	86
11	12	13	14	15	52	58	72	68	74	86	74	80	92
12	13	14	15	16	56	62	78	70	78	92	76	84	98
13	14	15	16	17	58	66	84	74	82	98	80	88	104
14	15	16	17	18	62	70	90	76	86	104	82	92	110
15	16	17	18	19	64	74	96	80	90	110	86	96	116
16	17	18	19	20	68	78	102	82	94	116	88	100	122
17	18	19	20	21	70	82	108	86	98	122	92	104	128
18	19	20	21	22	74	86	114	88	102	128	94	108	134
19	20	21	22	23	76	90	120	92	106	134	98	112	140
20	21	22	23	24	80	94	126	94	110	140	100	116	146

CULVERT PIPE LENGTHS, PL (FT) FOR TYPE A HEADWALLS

H = 4'-0" D= 24" TO 30"	SINGLE TRACK SIDE SLOPE			15' TRACK CENTERS SIDE SLOPE			20' TRACK CENTERS SIDE SLOPE		
HF AVG (FT)	1.5:1	2.0:1	3.0:1	1.5:1	2.0:1	3.0:1	1.5:1	2.0:1	3.0:1
5	32	32	32	48	48	48	54	54	54
6	36	36	38	50	52	54	56	58	60
7	38	40	44	54	56	60	60	62	66
8	42	44	50	56	60	66	62	66	72
9	44	48	56	60	64	72	66	70	78
10	48	52	62	62	68	78	68	74	84
11	50	56	68	66	72	84	72	78	90
12	54	60	74	68	76	90	74	82	96
13	56	64	80	72	80	96	78	86	102
14	60	68	86	74	84	102	80	90	108
15	62	72	92	78	88	108	84	94	114
16	66	76	98	80	92	114	86	98	120
17	68	80	104	84	96	120	90	102	126
18	72	84	110	86	100	126	92	106	132
19	74	88	116	90	104	132	96	110	138
20	78	92	122	92	108	138	98	114	144
21	80	96	128	96	112	144	102	118	150

NOTES:

1. TABLES ASSUME 15'-0" SHOULDER FOR SINGLE TRACK AND 15' TRACK CENTERS, 15'-6" SHOULDER FOR 20' TRACK CENTERS.
2. ADD 10' TO PIPE LENGTH FOR EACH ACCESS ROAD.
3. LENGTHS SHOWN ARE FOR STANDARD CROSS SECTIONS FOR TANGENT TRACK. ADD 2' TO PIPE LENGTH (TO OUTSIDE OF CURVE) IF SUPERELEVATION IS 2" OR GREATER.
4. STANDARD CROSS SECTION INCLUDES 2" CROWN, 6" SUBBALLAST, AND 1'-4" BALLAST (INCLUDING TIE). TOTAL BASE OF RAIL TO SUBGRADE OF 2'-0".
5. TYPE A HEADWALLS FOR STEEL PIPE CULVERTS UP TO 72" DIAMETER INCLUDE TYPE A-1 HEADWALLS FOR A SINGLE PIPE, TYPE A-2 HEADWALLS FOR TWO PIPES, TYPE A-3 HEADWALLS FOR THREE PIPES AND TYPE A-M HEADWALLS FOR MULTIPLE PIPES.

REV.	DATE	DESCRIPTION	DES.	ENG.
X	XX-XX-XX	REVISION	XX	XX

DRAWN BY: SCRRA DATE: 03/31/2011

ASSISTANT DIRECTOR: STANDARDS & DESIGN

DIRECTOR OF ENGINEERING AND CONSTRUCTION

METROLINK®

SOUTHERN CALIFORNIA REGIONAL RAIL AUTHORITY
ONE GATEWAY PLAZA, 12TH FLOOR, L. A., CA. 90012

ENGINEERING STANDARDS

CULVERT PIPE LENGTHS
FOR TYPE A HEADWALLS

STANDARD 6302
SCALE: NONE
REVISION –
SHEET 2 OF 2
CADD FILE: ES6302-02

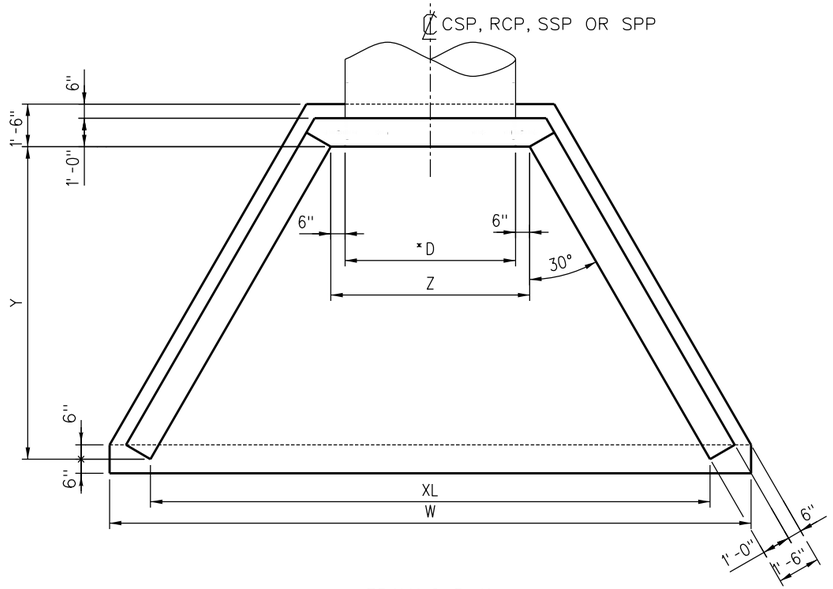

FRAMING PLAN
SCALE: 1/2"=1'-0"
(72" DIA. PIPE SHOWN)

TYPE A-1 HEADWALL DIMENSIONS SIDE SLOPE = 2:1					
H	* D	W	XL	Z	Y
3'-6"	24"	9'-4 1/4"	6'-5 5/8"	3'-0"	3'-0"
4'-0"	30"	11'-0 1/8"	8'-1 3/8"	3'-6"	4'-0"
4'-6"	36"	12'-7 7/8"	9'-9 1/4"	4'-0"	5'-0"
5'-6"	48"	15'-11 5/8"	13'-1"	5'-0"	7'-0"
6'-6"	60"	19'-3 3/8"	16'-4 3/4"	6'-0"	9'-0"
7'-6"	72"	22'-7"	19'-8 3/8"	7'-0"	11'-0"

*** NOTE:**

FOR SSP & RCP, D = OUTSIDE PIPE DIAMETER
FOR CSP & SPP, D = INSIDE PIPE DIAMETER

NOTES:

1. EQUATIONS REQUIRE VARIABLES TO BE IN INCHES.
2. D = PIPE DIAMETER (INCHES)
   SS = SIDE SLOPE (RUN PER UNIT OF RISE)
3. Y = SS x (H - 24)
4. Z = D + 12
5. XL = Z + (1.155 x Y)
6. W = XL + 34.641
7. ROUND DIMENSIONS TO THE NEAREST 1/8".

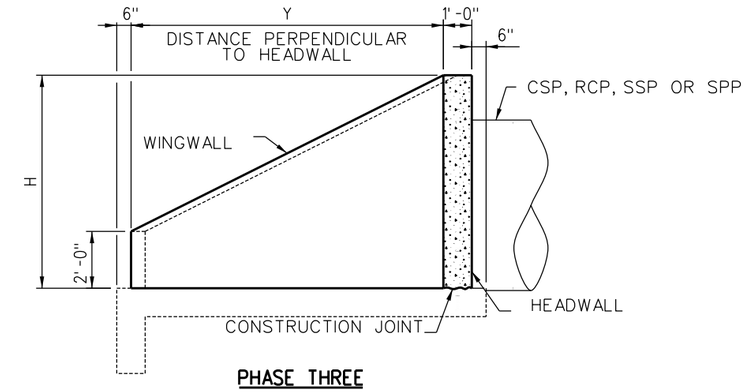

PHASE THREE

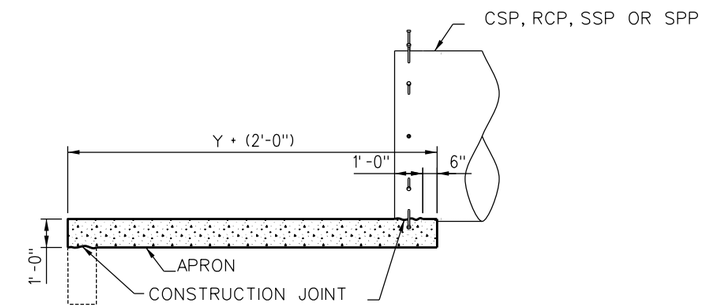

PHASE TWO

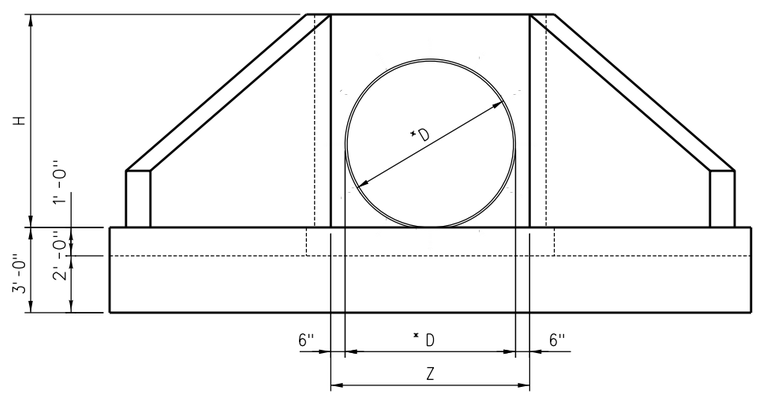

FRAMING ELEVATION
SCALE: 1/2"=1'-0"
(72" DIA. PIPE SHOWN)

NOTES:

1. FOR CONCRETE SPECIFICATIONS, SEE ES6301 AND SCRRA STANDARD SPECIFICATIONS
2. FOR PIPE BEDDING SPECIFICATIONS, SEE SCRRA STANDARDS SPECIFICATIONS 33 42 00, CULVERT AND DRAINAGE PIPE

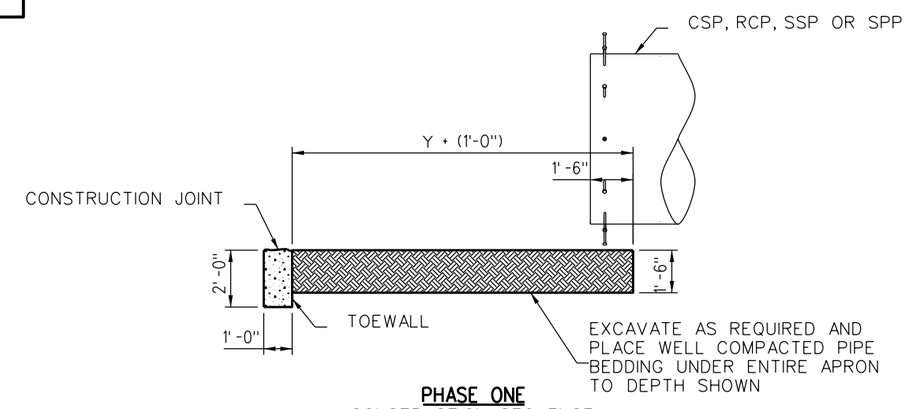

PHASE ONE
CONSTRUCTION SEQUENCE
SCALE: 1/2"=1'-0"
(LOOKING PERPENDICULAR TO PIPE)
(72" DIA. PIPE SHOWN)

REV.	DATE	DESCRIPTION	DES.	ENG.
B	04-29-16	REVISED CULVERT AND DRAIN SPECIFICATION	AC	NDP
A	07-10-15	ADDED RCP TO PLAN & NOTES	AC	NDP

DRAWN BY: SCRRA DATE: 03/31/2011

ASSISTANT DIRECTOR: STANDARDS & DESIGN

DIRECTOR OF ENGINEERING AND CONSTRUCTION

METROLINK®
SOUTHERN CALIFORNIA REGIONAL RAIL AUTHORITY
ONE GATEWAY PLAZA, 12TH FLOOR, L. A., CA. 90012

ENGINEERING STANDARDS

TYPE A-1 HEADWALL
FRAMING DETAILS

STANDARD 6304
SCALE: NONE
REVISION B SHEET 1 OF 3
CADD FILE: ES6304-01

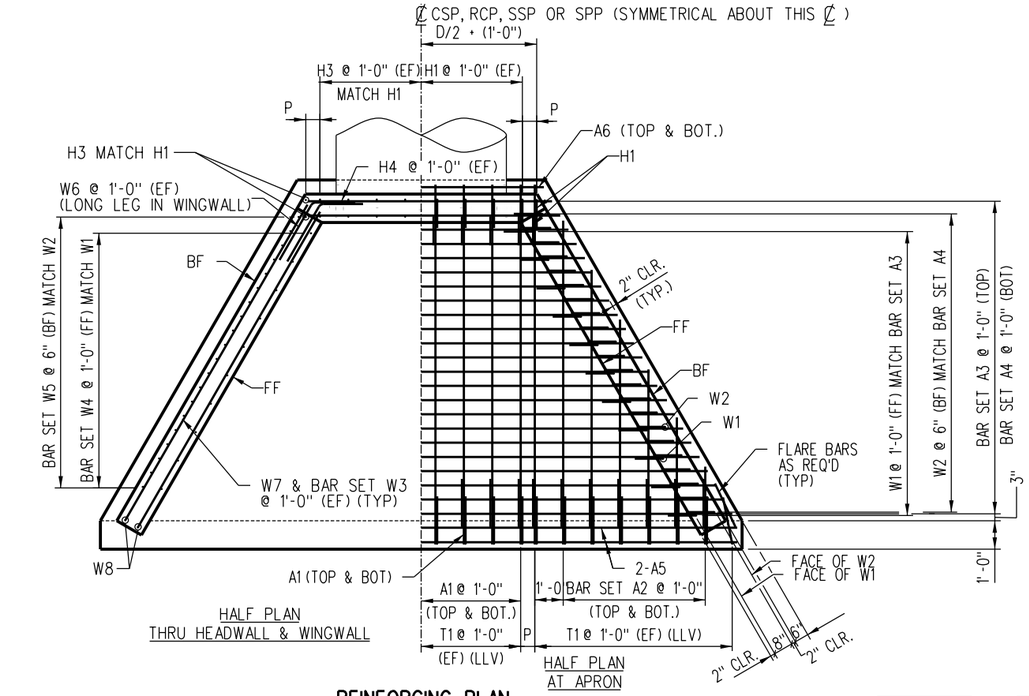

REINFORCING PLAN
(72" DIA. PIPE SHOWN)

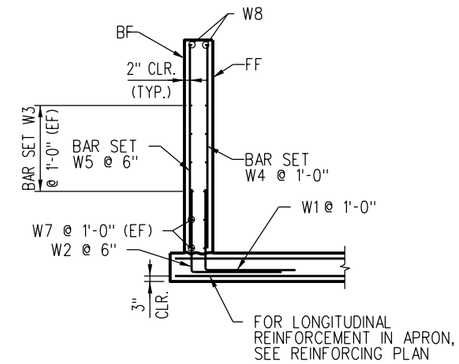

WINGWALL SECTION

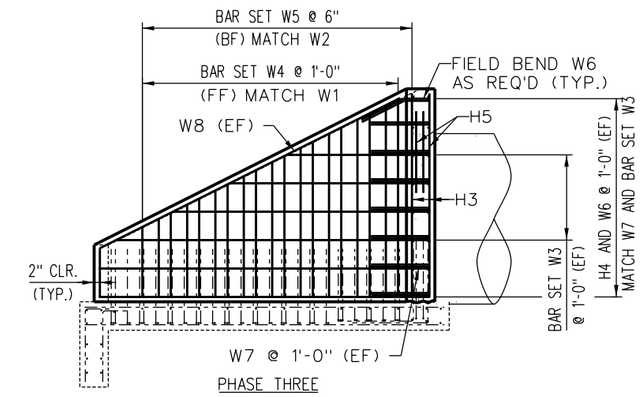

PHASE THREE

H	P
3'-6"	6"
4'-0"	9"
4'-6"	6"
5'-6"	6"
6'-6"	6"
7'-6"	6"

NOTES:

1. REINFORCING CALLOUT CONVENTION:

   A - APRON BARS
   H - HEADWALL BARS
   T - TOEWALL BARS
   W - WINGWALL BARS

2. A2 AND W3 CAN BE EITHER SINGLE BAR OR BAR SET. W3 NOT REQUIRED IN 3'-6" HEADWALL.
3. EQUATIONS REQUIRE VARIABLES TO BE IN INCHES.
4. M = Z / 12 (ROUND M DOWN TO NEAREST INTEGER)
5. P = (Z / 2) - (6 x M) + 6 (ROUND P TO NEAREST 1/4")

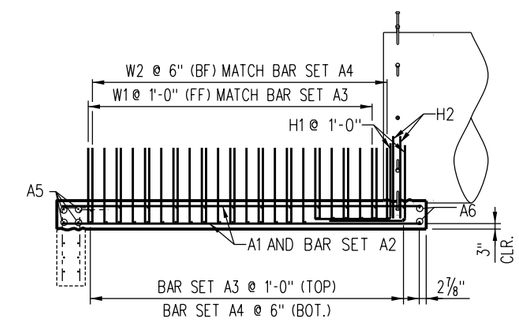

PHASE TWO

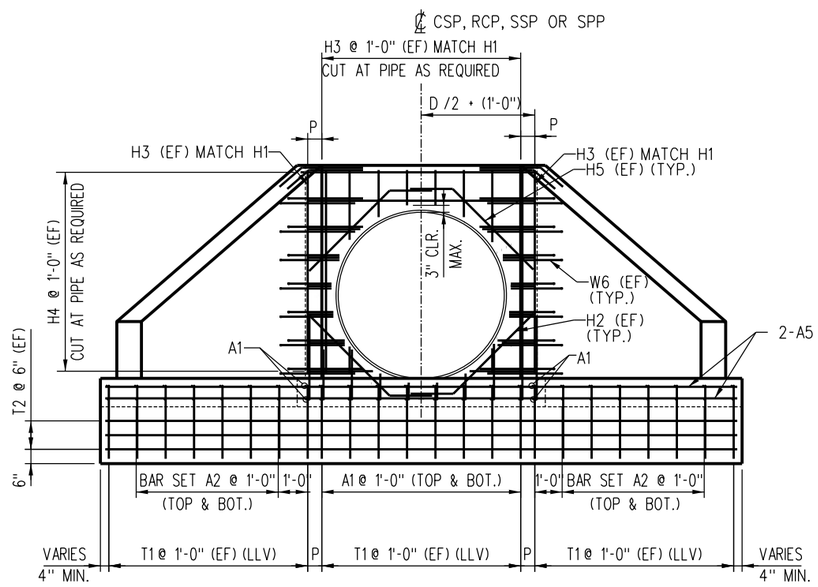

REINFORCING ELEVATION
(72" DIA. PIPE SHOWN)

NOTE:

BF = BACK FACE
EF = EACH FACE
FF = FRONT FACE
LLV = LONG LEG VERTICAL

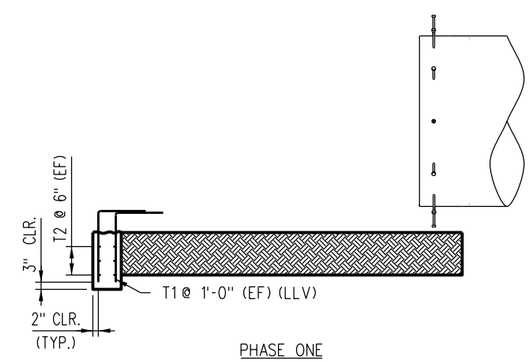

PHASE ONE

CONSTRUCTION SEQUENCE
(LOOKING PERPENDICULAR TO `PIPE)
(72" DIA. PIPE SHOWN)

REV.	DATE	DESCRIPTION	DES.	ENG.
A	07-10-15	ADDED "RCP" TO PLAN AND ELEVATION	AC	NDP

DRAWN BY: SCRRA DATE: 03/31/2011

ASSISTANT DIRECTOR: STANDARDS & DESIGN

DIRECTOR OF ENGINEERING AND CONSTRUCTION

METROLINK®
SOUTHERN CALIFORNIA REGIONAL RAIL AUTHORITY
ONE GATEWAY PLAZA, 12TH FLOOR, L. A., CA. 90012

ENGINEERING STANDARDS

TYPE A-1 HEADWALL
REINFORCING DETAILS

STANDARD 6304
SCALE: NONE
REVISION A
SHEET 2 OF 3
CADD FILE: ES6304-02

REINFORCING SCHEDULE - 3'-6" HEADWALL

PIPE DIAMETER = 24" SIDE SLOPE = 2:1

	BAR DESIGNATION	TOTAL	MARK	SIZE	LENGTH	SHAPE
PHASE 1	T1	20	C403b	#4	4'-3"	
	T2	6	C900	#4	9'-0"	
PHASE 2	A1	12	D408	#5	4'-8"	
	A2	4	D304	#5	3'-4"	
	A5	4	D900	#5	9'-0"	
	A6	2	D407	#5	4'-7"	
	H1	12	D504b	#5	5'-4"	
	H2	4	D309b	#5	3'-9"	
	W1	6	C504b	#4	5'-4"	
	W2	12	D504b	#5	5'-4"	
PHASE 3	H3	12	D303	#5	3'-3"	
	H4	8	D400	#5	4'-0"	
	H5	4	D309b	#5	3'-9"	
	W6	16	D310b	#5	3'-10"	
	W7	8	D308	#5	3'-8"	
	W8	4	D505b	#5	5'-5"	

SET LIST

	BAR DESIGNATION	MARK	SIZE	MIN. LENGTH	MAX. LENGTH	INCREMENT	NO.OF BARS/SET	NO.OF SETS	SHAPE
PHASE 2	A3	D502-D808	#5	5'-2"	8'-8"	1'-1 1/8"(-)	4	1	
	A4	D502-D808	#5	5'-2"	8'-8"	6 15/16"(-)	7	1	
PHASE 3	W4	C206-C300	#4	2'-6"	3'-0"	6"	2	2	
	W5	D204-D301	#5	2'-4"	3'-1"	3"	4	2	

BENDING DIAGRAM

(DIMENSIONS ARE OUT TO OUT)

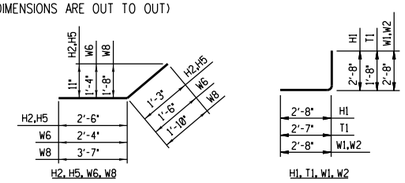

EST. WT. OF REINFORCING STEEL = 700 LB.

REINFORCING SCHEDULE - 4'-0" HEADWALL

PIPE DIAMETER = 30" SIDE SLOPE = 2:1

	BAR DESIGNATION	TOTAL	MARK	SIZE	LENGTH	SHAPE
PHASE 1	T1	24	C403b	#4	4'-3"	
	T2	6	C1008	#4	10'-8"	
PHASE 2	A1	12	D508	#5	5'-8"	
	A5	4	D1008	#5	10'-8"	
	A6	2	D501	#5	5'-1"	
	H1	12	D504b	#5	5'-4"	
	H2	4	D400b	#5	4'-0"	
	W1	8	C504b	#4	5'-4"	
	W2	16	D504b	#5	5'-4"	
PHASE 3	H3	12	D309	#5	3'-9"	
	H4	10	D406	#5	4'-6"	
	H5	4	D400b	#5	4'-0"	
	W3	4	C400	#4	4'-0"	
	W6	20	D310b	#5	3'-10"	
	W7	8	D410	#5	4'-10"	
	W8	4	D608b	#5	6'-8"	

SET LIST

	BAR DESIGNATION	MARK	SIZE	MIN. LENGTH	MAX. LENGTH	INCREMENT	NO.OF BARS/SET	NO.OF SETS	SHAPE
PHASE 2	A2	D208-D404	#5	2'-8"	4'-4"	1'-8 13/16"(-)	2	4	
	A3	D508-D1004	#5	5'-8"	10'-4"	1'-1 1/8"(-)	5	1	
	A4	D508-D1004	#5	5'-8"	10'-4"	6 15/16"(-)	9	1	
PHASE 3	W4	C206-C306	#4	2'-6"	3'-6"	6"	3	2	
	W5	D204-D307	#5	2'-4"	3'-7"	3"	6	2	

BENDING DIAGRAM

(DIMENSIONS ARE OUT TO OUT)

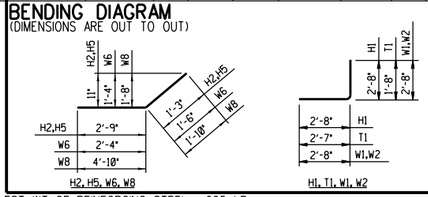

EST. WT. OF REINFORCING STEEL = 905 LB.

REINFORCING SCHEDULE - 4'-6" HEADWALL

PIPE DIAMETER = 36" SIDE SLOPE = 2:1

	BAR DESIGNATION	TOTAL	MARK	SIZE	LENGTH	SHAPE
PHASE 1	T1	26	C403b	#4	4'-3"	
	T2	6	C1203	#4	12'-3"	
PHASE 2	A1	14	D608	#5	6'-8"	
	A5	4	D1203	#5	12'-3"	
	A6	2	D507	#5	5'-7"	
	H1	14	D504b	#5	5'-4"	
	H2	4	D403b	#5	4'-3"	
	W1	10	C504b	#4	5'-4"	
	W2	20	D504b	#5	5'-4"	
PHASE 3	H3	14	D403	#5	4'-3"	
	H4	10	D500	#5	5'-0"	
	H5	4	D403b	#5	4'-3"	
	W3	4	C502	#4	5'-2"	
	W6	20	D310b	#5	3'-10"	
	W7	8	D511	#5	5'-11"	
	W8	4	D800b	#5	8'-0"	

SET LIST

	BAR DESIGNATION	MARK	SIZE	MIN. LENGTH	MAX. LENGTH	INCREMENT	NO.OF BARS/SET	NO.OF SETS	SHAPE
PHASE 2	A2	D308-D504	#5	3'-8"	5'-4"	1'-8 13/16"(-)	2	4	
	A3	D602-D1111	#5	6'-2"	11'-11"	1'-1 1/8"(-)	6	1	
	A4	D602-D1111	#5	6'-2"	11'-11"	6 15/16"(-)	11	1	
PHASE 3	W4	C206-C400	#4	2'-6"	4'-0"	6"	4	2	
	W5	D204-D401	#5	2'-4"	4'-1"	3"	8	2	

BENDING DIAGRAM

(DIMENSIONS ARE OUT TO OUT)

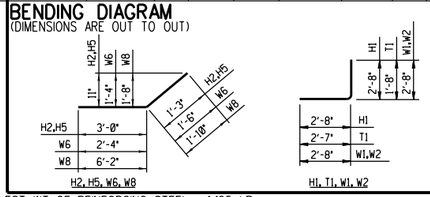

EST. WT. OF REINFORCING STEEL = 1,105 LB.

REINFORCING SCHEDULE - 5'-6" HEADWALL

PIPE DIAMETER = 48" SIDE SLOPE = 2:1

	BAR DESIGNATION	TOTAL	MARK	SIZE	LENGTH	SHAPE
PHASE 1	T1	32	C403b	#4	4'-3"	
	T2	6	C1507	#4	15'-7"	
PHASE 2	A1	16	D808	#5	8'-8"	
	A5	4	D1507	#5	15'-7"	
	A6	2	D607	#5	6'-7"	
	H1	16	D504b	#5	5'-4"	
	H2	4	D409b	#5	4'-9"	
	W1	14	C504b	#4	5'-4"	
	W2	28	D504b	#5	5'-4"	
PHASE 3	H3	16	D503	#5	5'-3"	
	H4	12	D600	#5	6'-0"	
	H5	4	D409b	#5	4'-9"	
	W6	24	D310b	#5	3'-10"	
	W7	8	D803	#5	8'-3"	
	W8	4	D1006b	#5	10'-6"	

SET LIST

	BAR DESIGNATION	MARK	SIZE	MIN. LENGTH	MAX. LENGTH	INCREMENT	NO.OF BARS/SET	NO.OF SETS	SHAPE
PHASE 2	A2	D311-D704	#5	3'-11"	7'-4"	1'-8 13/16"(-)	3	4	
	A3	D702-D1503	#5	7'-2"	15'-3"	1'-1 1/8"(-)	8	1	
	A4	D702-D1503	#5	7'-2"	15'-3"	6 15/16"(-)	15	1	
PHASE 3	W3	C502-C705	#4	5'-2"	7'-5"	2'-3 11/16"(+)	2	4	
	W4	C206-C500	#4	2'-6"	5'-0"	6"	6	2	
	W5	D204-D501	#5	2'-4"	5'-1"	3"	12	2	

BENDING DIAGRAM

(DIMENSIONS ARE OUT TO OUT)

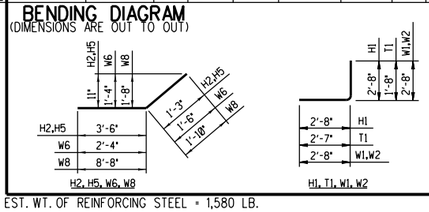

EST. WT. OF REINFORCING STEEL = 1,580 LB.

REINFORCING SCHEDULE - 6'-6" HEADWALL

PIPE DIAMETER = 60" SIDE SLOPE = 2:1

	BAR DESIGNATION	TOTAL	MARK	SIZE	LENGTH	SHAPE
PHASE 1	T1	42	C403b	#4	4'-3"	
	T2	6	C1811	#4	18'-11"	
PHASE 2	A1	18	D1008	#5	10'-8"	
	A5	4	D1811	#5	18'-11"	
	A6	2	D707	#5	7'-7"	
	H1	18	D504b	#5	5'-4"	
	H2	4	D503b	#5	5'-3"	
	W1	18	C504b	#4	5'-4"	
	W2	36	D504b	#5	5'-4"	
PHASE 3	H3	18	D603	#5	6'-3"	
	H4	14	D700	#5	7'-0"	
	H5	4	D503b	#5	5'-3"	
	W6	28	D310b	#5	3'-10"	
	W7	8	D1007	#5	10'-7"	
	W8	4	D1300b	#5	13'-0"	

SET LIST

	BAR DESIGNATION	MARK	SIZE	MIN. LENGTH	MAX. LENGTH	INCREMENT	NO.OF BARS/SET	NO.OF SETS	SHAPE
PHASE 2	A2	D205-D904	#5	2'-5"	9'-4"	1'-8 13/16"(-)	5	4	
	A3	D802-D1807	#5	8'-2"	18'-7"	1'-1 1/8"(-)	10	1	
	A4	D802-D1807	#5	8'-2"	18'-7"	6 15/16"(-)	19	1	
PHASE 3	W3	C502-C909	#4	5'-2"	9'-9"	2'-3 11/16"(+)	3	4	
	W4	C206-C600	#4	2'-6"	6'-0"	6"	8	2	
	W5	D204-D601	#5	2'-4"	6'-1"	3"	16	2	

BENDING DIAGRAM

(DIMENSIONS ARE OUT TO OUT)

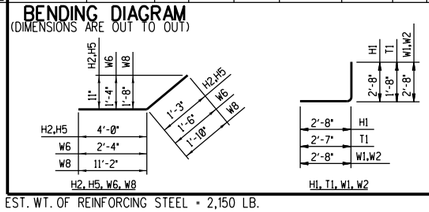

EST. WT. OF REINFORCING STEEL = 2,150 LB.

REINFORCING SCHEDULE - 7'-6" HEADWALL

PIPE DIAMETER = 72" SIDE SLOPE = 2:1

	BAR DESIGNATION	TOTAL	MARK	SIZE	LENGTH	SHAPE
PHASE 1	T1	48	C403b	#4	4'-3"	
	T2	6	C2203	#4	22'-3"	
PHASE 2	A1	20	D1208	#5	12'-8"	
	A5	4	D2203	#5	22'-3"	
	A6	2	D807	#5	8'-7"	
	H1	20	D504b	#5	5'-4"	
	H2	4	D509b	#5	5'-9"	
	W1	22	C504b	#4	5'-4"	
	W2	44	D504b	#5	5'-4"	
PHASE 3	H3	20	D703	#5	7'-3"	
	H4	16	D800	#5	8'-0"	
	H5	4	D509b	#5	5'-9"	
	W6	32	D310b	#5	3'-10"	
	W7	8	D1211	#5	12'-11"	
	W8	4	D1506b	#5	15'-6"	

SET LIST

	BAR DESIGNATION	MARK	SIZE	MIN. LENGTH	MAX. LENGTH	INCREMENT	NO.OF BARS/SET	NO.OF SETS	SHAPE
PHASE 2	A2	D208-D1104	#5	2'-8"	11'-4"	1'-8 13/16"(-)	6	4	
	A3	D902-D2111	#5	9'-2"	21'-11"	1'-1 1/8"(-)	12	1	
	A4	D902-D2111	#5	9'-2"	21'-11"	6 15/16"(-)	23	1	
PHASE 3	W3	C502-C1201	#4	5'-2"	12'-1"	2'-3 11/16"(+)	4	4	
	W4	C206-C700	#4	2'-6"	7'-0"	6"	10	2	
	W5	D204-D701	#5	2'-4"	7'-1"	3"	20	2	

BENDING DIAGRAM

(DIMENSIONS ARE OUT TO OUT)

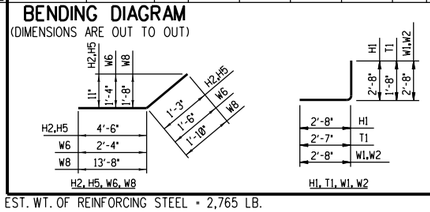

EST. WT. OF REINFORCING STEEL = 2,765 LB.

CONCRETE QUANTITIES

H	TOEWALL CU. YD.	APRON CU. YD.	HEADWALL & WINGWALLS CU. YD.	TOTAL CU. YD.
3'-6"	0.7	1.4	1.3	3.4
4'-0"	0.9	2.0	1.8	4.7
4'-6"	1.0	2.6	2.3	5.9
5'-6"	1.2	4.0	3.5	8.7
6'-6"	1.5	5.8	5.0	12.3
7'-6"	1.7	7.8	6.8	16.3

NOTES:

1. QUANTITIES ARE FOR ONE HEADWALL ONLY.
2. BAR DESIGNATIONS CONSIST OF BAR SIZE & LENGTH FOLLOWED BY THE LETTER "b" IF BENT. BAR SIZES ARE REPRESENTED BY THE LETTERS A THROUGH L CORRESPONDING TO BAR SIZE #2 THROUGH #18. BAR LENGTHS ARE GIVEN IN FEET AND INCHES; THE LAST TWO DIGITS ARE INCHES.
3. CONCRETE VOLUME FOR HEADWALL ASSUMES SOLID WALL WITHOUT A PIPE. TO DETERMINE REQUIRED CONCRETE QUANTITY, SUBTRACT THE APPLICABLE PIPE VOLUME AS FOLLOWS:

   24" DIA. = 0.11 CU. YD.
   30" DIA. = 0.18 CU. YD.
   36" DIA. = 0.26 CU. YD.
   48" DIA. = 0.46 CU. YD.
   60" DIA. = 0.72 CU. YD.
   72" DIA. = 1.04 CU. YD.

REINFORCING BAR LEGEND:

A - APRON BARS
H - HEADWALL BARS
T - TOEWALL BARS
W - WINGWALL BARS

A2 AND W3 CAN BE EITHER SINGLE BAR OR BAR SET.
W3 NOT REQUIRED IN 3'-6" HEADWALL.

REV.	DATE	DESCRIPTION	DES.	ENG.
X	XX-XX-XX	REVISION	XX	XX

DRAWN BY: SCRRA DATE: 03/31/2011

ASSISTANT DIRECTOR: STANDARDS & DESIGN

DIRECTOR OF ENGINEERING AND CONSTRUCTION

METROLINK®
SOUTHERN CALIFORNIA REGIONAL RAIL AUTHORITY
ONE GATEWAY PLAZA, 12TH FLOOR, L. A., CA. 90012

ENGINEERING STANDARDS

TYPE A-1 HEADWALL
REINFORCING SCHEDULE

STANDARD 6304
SCALE: NONE
REVISION –
SHEET 3 OF 3
CADD FILE: ES6304-03

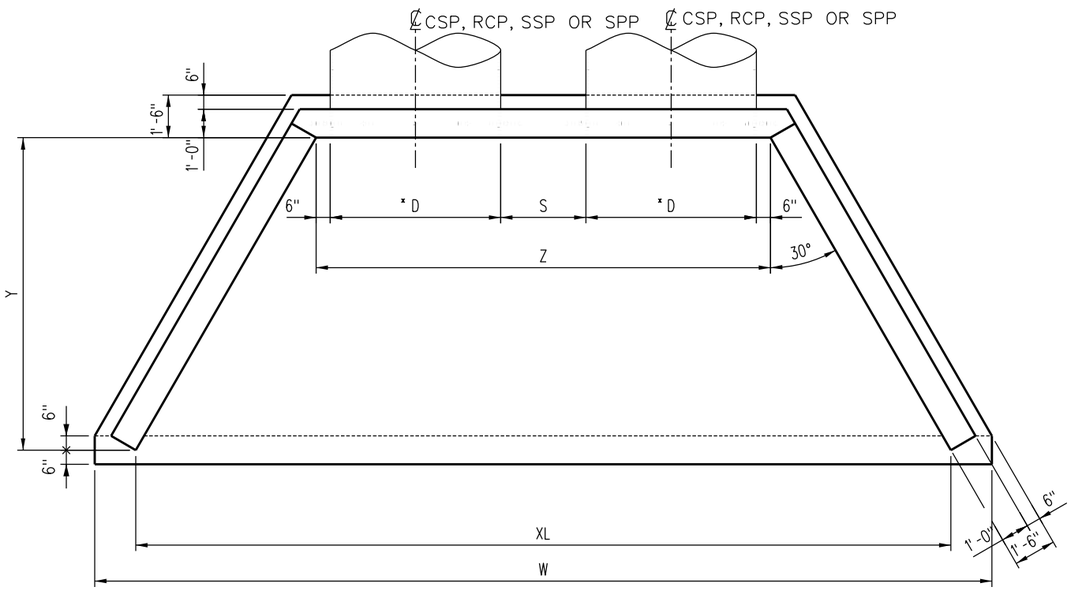

FRAMING PLAN
(72" DIA. PIPES SHOWN)

TYPE A-2 HEADWALL DIMENSIONS
SIDE SLOPE = 2:1

H	*D	S	W	XL	Z	Y
3'-6"	24"	12"	12'-4 1/4"	9'-5 5/8"	6'-0"	3'-0"
4'-0"	30"	15"	14'-9 1/8"	11'-10 3/8"	7'-3"	4'-0"
4'-6"	36"	18"	17'-1 7/8"	14'-3 1/4"	8'-6"	5'-0"
5'-6"	48"	24"	21'-11 5/8"	19'-1"	11'-0"	7'-0"
6'-6"	60"	30"	26'-9 3/8"	23'-10 3/4"	13'-6"	9'-0"
7'-6"	72"	36"	31'-7"	28'-8 3/8"	16'-0"	11'-0"

* FOR SSP & RCP, D = OUTSIDE PIPE DIAMETER
FOR CSP & SPP, D = INSIDE PIPE DIAMETER

NOTES:

1. EQUATIONS REQUIRE VARIABLES TO BE IN INCHES.
2. D = PIPE DIAMETER (INCHES)
   S = SPACING BETWEEN ADJACENT PIPES (INCHES)
   SS = SIDE SLOPE (RUN PER UNIT OF RISE)
3. Y = SS x (H - 24)
4. Z = (2 x D) + S + 12
5. XL = Z + (1.155 x Y)
6. W = XL + 34.641
7. ROUND DIMENSIONS TO THE NEAREST 1/8".

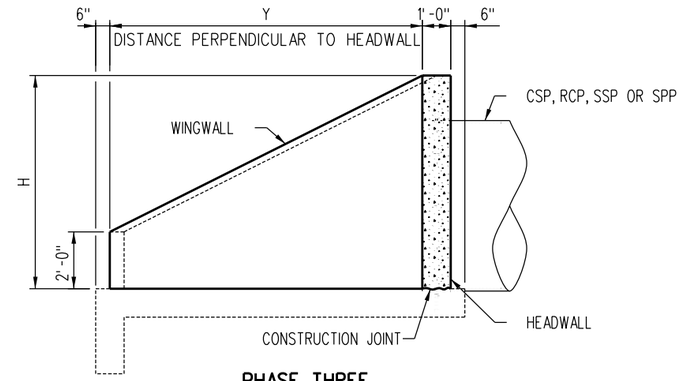

PHASE THREE

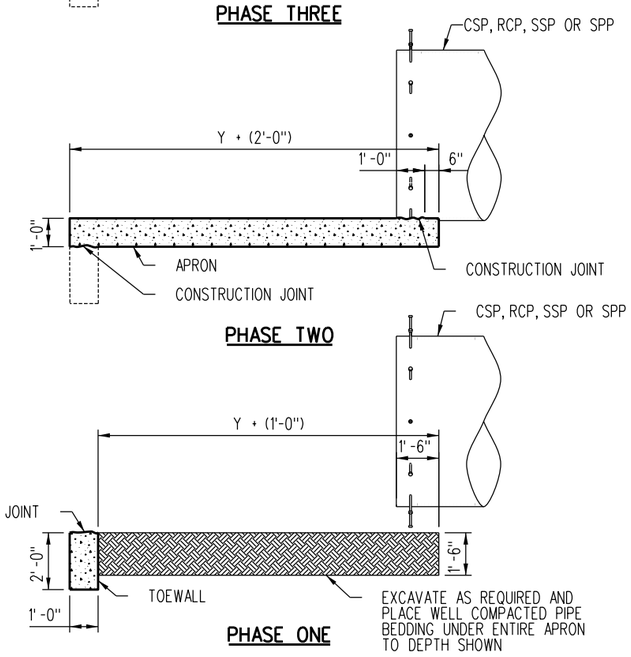

CONSTRUCTION SEQUENCE
(LOOKING PERPENDICULAR TO ` PIPE)
(72" DIA. PIPE SHOWN)

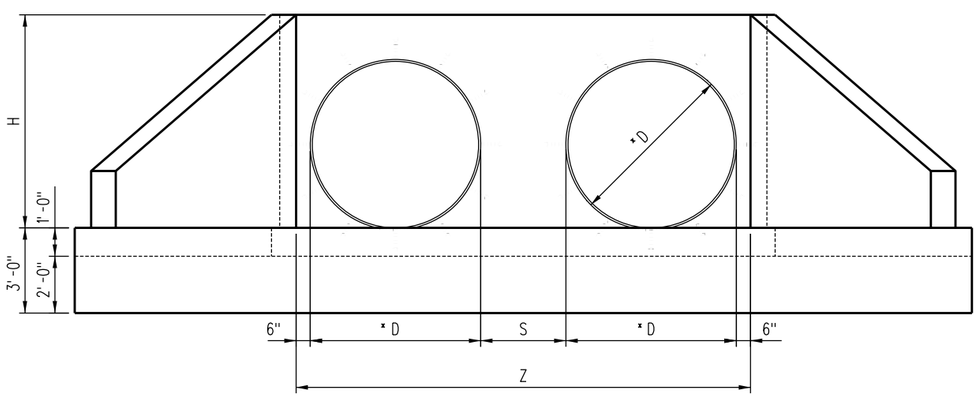

FRAMING ELEVATION
(72" DIA. PIPES SHOWN)

NOTES:

1. FOR CONCRETE SPECIFICATIONS, SEE ES6301 AND SCRRA STANDARDS SPECIFICATIONS.
2. FOR PIPE BEDDING SPECIFICATIONS, SEE SCRRA STANDARD SPECIFICATION 33 42 00, CULVERT AND DRAINAGE PIPE.

REV.	DATE	DESCRIPTION	DES.	ENG.
B	09-14-16	REVISED PIPE BEDDING SPECIFICATION NOTE	AC	NDP
A	07-10-15	ADDED RCP TO NOTES AND TABLE	AC	NDP

DRAWN BY: SCRRA DATE: 03/31/2011

ASSISTANT DIRECTOR: STANDARDS & DESIGN

DIRECTOR OF ENGINEERING AND CONSTRUCTION

METROLINK®
SOUTHERN CALIFORNIA REGIONAL RAIL AUTHORITY
ONE GATEWAY PLAZA, 12TH FLOOR, L. A., CA. 90012

ENGINEERING STANDARDS

TYPE A-2 HEADWALL
FRAMING DETAILS

STANDARD 6306
SCALE: NONE
REVISION B SHEET 1 OF 3
CADD FILE: ES6306-01

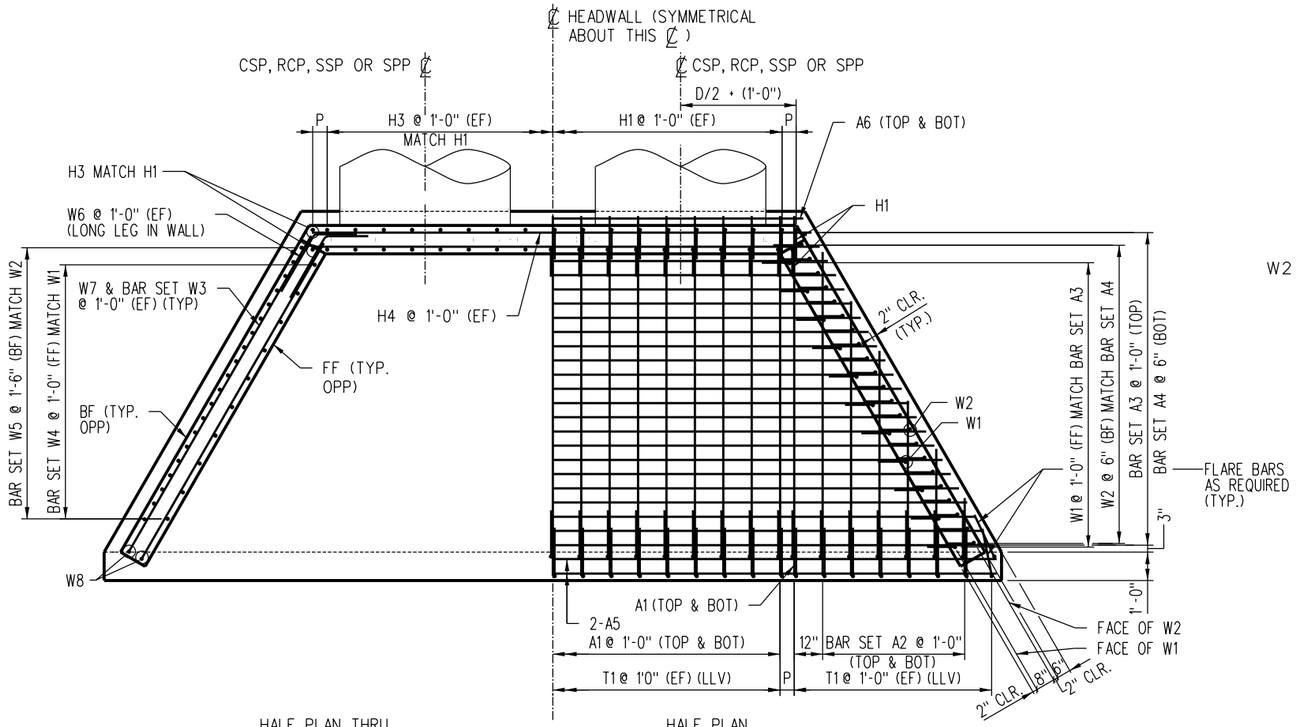

HALF PLAN THRU HEADWALL & WINGWALL

HALF PLAN AT APRON

REINFORCING PLAN
(72" DIA. PIPES SHOWN)

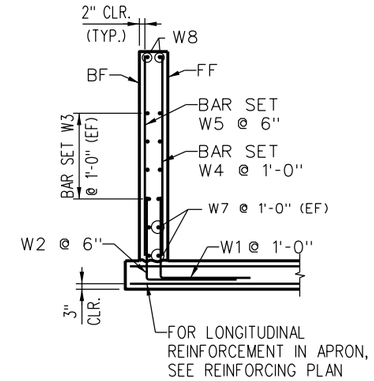

WINGWALL SECTION

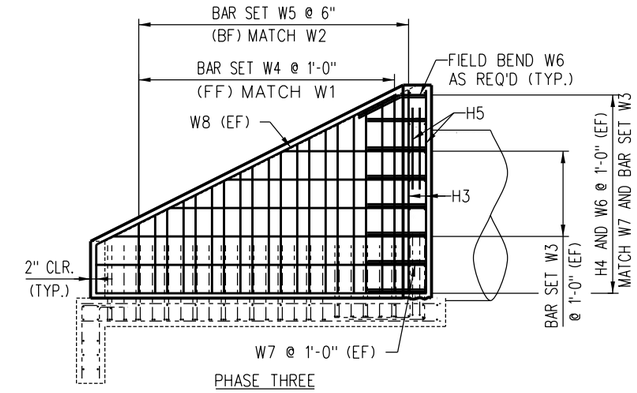

PHASE THREE

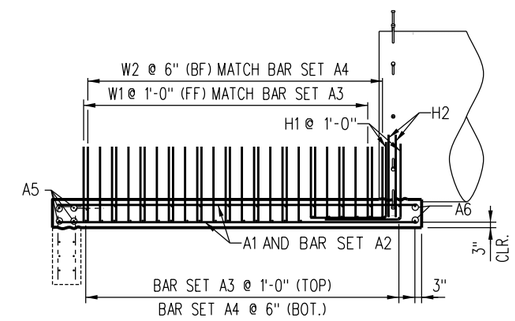

PHASE TWO

NOTE:

BF = BACK FACE
EF = EACH FACE
FF = FRONT FACE
LLV = LONG LEG VERTICAL

H	P
3'-6"	6"
4'-0"	7"
4'-6"	9"
5'-6"	6"
6'-6"	9"
7'-6"	6"

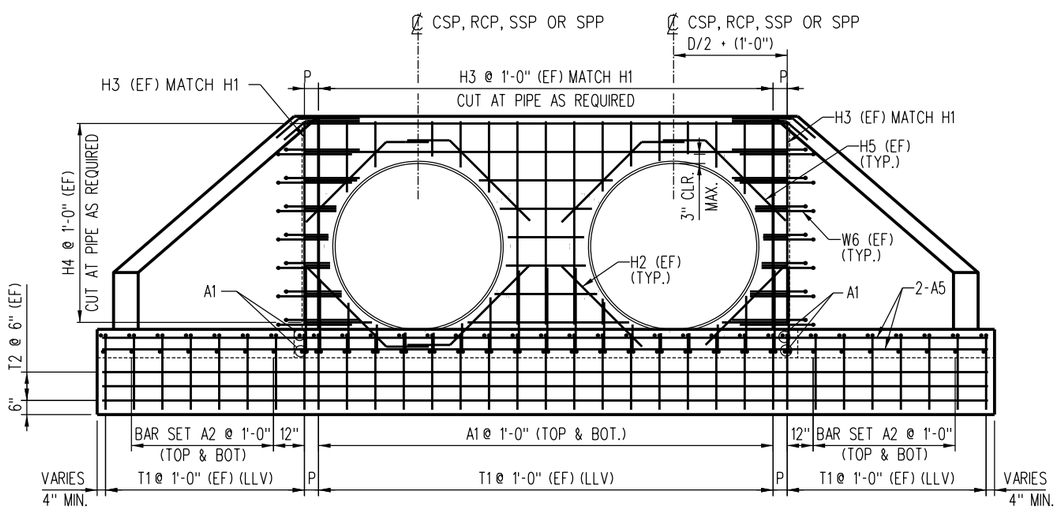

REINFORCING ELEVATION
(72" DIA. PIPES SHOWN)

NOTES:

1. REINFORCING CALLOUT CONVENTION:

   A - APRON BARS
   H - HEADWALL BARS
   T - TOEWALL BARS
   W - WINGWALL BARS

2. A2 AND W3 CAN BE EITHER SINGLE BAR OR BAR SET. W3 NOT REQUIRED IN 3'-6" HEADWALL.

3. EQUATIONS REQUIRE VARIABLES TO BE IN INCHES.

4. M = Z / 12 (ROUND M DOWN TO NEAREST INTEGER)

5. P = (Z / 2) - (6 x M) + 6 (ROUND P TO NEAREST 1/4")

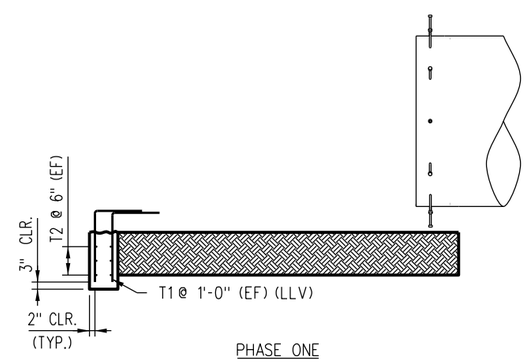

PHASE ONE

CONSTRUCTION SEQUENCE
(LOOKING PERPENDICULAR TO PIPE)
(72" DIA. PIPE SHOWN)

REV.	DATE	DESCRIPTION	DES.	ENG.
A	07-10-15	ADD RCP TO PLAN & ELEVATION	AC	NDP

DRAWN BY: SCRRA DATE: 03/31/2011

ASSISTANT DIRECTOR: STANDARDS & DESIGN

DIRECTOR OF ENGINEERING AND CONSTRUCTION

METROLINK®
SOUTHERN CALIFORNIA REGIONAL RAIL AUTHORITY
ONE GATEWAY PLAZA, 12TH FLOOR, L. A., CA. 90012

ENGINEERING STANDARDS

TYPE A-2 HEADWALL REINFORCING DETAILS

STANDARD 6306
SCALE: NONE
REVISION A
SHEET 2 OF 3
CADD FILE: ES6306-02

REINFORCING SCHEDULE - 3'-6" HEADWALL

PIPE DIAMETER = 24" SIDE SLOPE = 2:1

	BAR DESIGNATION	TOTAL	MARK	SIZE	LENGTH	SHAPE
PHASE 1	T1	26	C403B	#4	4'-3"	
	T2	6	C1200	#4	12'-0"	
PHASE 2	A1	18	D408	#5	4'-8"	
	A2	4	D304	#5	3'-4"	
	A5	4	D1200	#5	12'-0"	
	A6	2	D707	#5	7'-7"	
	H1	18	D504B	#5	5'-4"	
	H2	8	D309B	#5	3'-9"	
	W1	6	C504B	#4	5'-4"	
	W2	12	D504B	#5	5'-4"	
PHASE 3	H3	18	D303	#5	3'-3"	
	H4	8	D700	#5	7'-0"	
	H5	8	D309B	#5	3'-9"	
	W6	16	D310B	#5	3'-10"	
	W7	8	D308	#5	3'-8"	
	W8	4	D505B	#5	5'-5"	

SET LIST

	BAR DESIGNATION	MARK	SIZE	MIN. LENGTH	MAX. LENGTH	INCREMENT	NO.OF BARS/SET	NO.OF SETS	SHAPE
PHASE 2	A3	D802-D1108	#5	8'-2"	11'-8"	1'-1 1/8"(-)	4	1	
	A4	D802-D1108	#5	8'-2"	11'-8"	6 15/16"(-)	7	1	
PHASE 3	W4	C206-C300	#4	2'-6"	3'-0"	6"	2	2	
	W5	D204-D301	#5	2'-4"	3'-1"	3"	4	2	

BENDING DIAGRAM

(DIMENSIONS ARE OUT TO OUT)

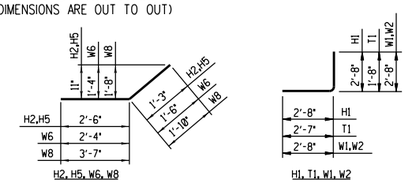

EST. WT. OF REINFORCING STEEL = 925 LB.

REINFORCING SCHEDULE - 4'-0" HEADWALL

PIPE DIAMETER = 30" SIDE SLOPE = 2:1

	BAR DESIGNATION	TOTAL	MARK	SIZE	LENGTH	SHAPE
PHASE 1	T1	32	C403B	#4	4'-3"	
	T2	6	C1405	#4	14'-5"	
PHASE 2	A1	20	D508	#5	5'-8"	
	A5	4	D1405	#5	14'-5"	
	A6	2	D810	#5	8'-10"	
	H1	20	D504B	#5	5'-4"	
	H2	8	D400B	#5	4'-0"	
	W1	8	C504B	#4	5'-4"	
	W2	16	D504B	#5	5'-4"	
PHASE 3	H3	20	D309	#5	3'-9"	
	H4	10	D803	#5	8'-3"	
	H5	8	D400B	#5	4'-0"	
	W3	4	C400	#4	4'-0"	
	W6	20	D310B	#5	3'-10"	
	W7	8	D410	#5	4'-10"	
	W8	4	D608B	#5	6'-8"	

SET LIST

	BAR DESIGNATION	MARK	SIZE	MIN. LENGTH	MAX. LENGTH	INCREMENT	NO.OF BARS/SET	NO.OF SETS	SHAPE
PHASE 2	A2	D208-D404	#5	2'-8"	4'-4"	1'-8 13/16"(-)	2	4	
	A3	D905-D1401	#5	9'-5"	14'-1"	1'-1 1/8"(-)	5	1	
	A4	D905-D1401	#5	9'-5"	14'-1"	6 15/16"(-)	9	1	
PHASE 3	W4	C206-C306	#4	2'-6"	3'-6"	6"	3	2	
	W5	D204-D307	#5	2'-4"	3'-7"	3"	6	2	

BENDING DIAGRAM

(DIMENSIONS ARE OUT TO OUT)

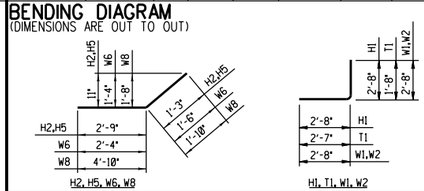

EST. WT. OF REINFORCING STEEL = 1,215LB.

REINFORCING SCHEDULE - 4'-6" HEADWALL

PIPE DIAMETER = 36" SIDE SLOPE = 2:1

	BAR DESIGNATION	TOTAL	MARK	SIZE	LENGTH	SHAPE
PHASE 1	T1	34	C403B	#4	4'-3"	
	T2	6	C1609	#4	16'-9"	
PHASE 2	A1	22	D608	#5	6'-8"	
	A5	4	D1609	#5	16'-9"	
	A6	2	D1001	#5	10'-1"	
	H1	22	D504B	#5	5'-4"	
	H2	8	D403B	#5	4'-3"	
	W1	10	C504B	#4	5'-4"	
	W2	20	D504B	#5	5'-4"	
PHASE 3	H3	22	D403	#5	4'-3"	
	H4	10	D906	#5	9'-6"	
	H5	8	D403B	#5	4'-3"	
	W3	4	C502	#4	5'-2"	
	W6	20	D310B	#5	3'-10"	
	W7	8	D511	#5	5'-11"	
	W8	4	D800B	#5	8'-0"	

SET LIST

	BAR DESIGNATION	MARK	SIZE	MIN. LENGTH	MAX. LENGTH	INCREMENT	NO.OF BARS/SET	NO.OF SETS	SHAPE
PHASE 2	A2	D308-D504	#5	3'-8"	5'-4"	1'-8 13/16"(-)	2	4	
	A3	D1008-D1605	#5	10'-8"	16'-5"	1'-1 1/8"(-)	6	1	
	A4	D1008-D1605	#5	10'-8"	16'-5"	6 15/16"(-)	11	1	
PHASE 3	W4	C206-C400	#4	2'-6"	4'-0"	6"	4	2	
	W5	D204-D401	#5	2'-4"	4'-1"	3"	8	2	

BENDING DIAGRAM

(DIMENSIONS ARE OUT TO OUT)

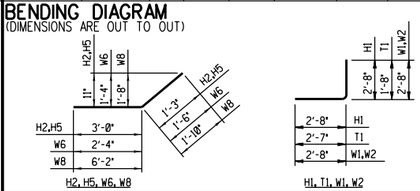

EST. WT. OF REINFORCING STEEL = 1,470 LB.

REINFORCING SCHEDULE - 5'-6" HEADWALL

PIPE DIAMETER = 48" SIDE SLOPE = 2:1

	BAR DESIGNATION	TOTAL	MARK	SIZE	LENGTH	SHAPE
PHASE 1	T1	44	C403B	#4	4'-3"	
	T2	6	C2107	#4	21'-7"	
PHASE 2	A1	28	D808	#5	8'-8"	
	A5	4	D2107	#5	21'-7"	
	A6	2	D1207	#5	12'-7"	
	H1	28	D504B	#5	5'-4"	
	H2	8	D409B	#5	4'-9"	
	W1	14	C504B	#4	5'-4"	
	W2	28	D504B	#5	5'-4"	
PHASE 3	H3	28	D503	#5	5'-3"	
	H4	12	D1200	#5	12'-0"	
	H5	8	D409B	#5	4'-9"	
	W6	24	D310B	#5	3'-10"	
	W7	8	D803	#5	8'-3"	
	W8	4	D1006B	#5	10'-6"	

SET LIST

	BAR DESIGNATION	MARK	SIZE	MIN. LENGTH	MAX. LENGTH	INCREMENT	NO.OF BARS/SET	NO.OF SETS	SHAPE
PHASE 2	A2	D311-D704	#5	3'-11"	7'-4"	1'-8 13/16"(-)	3	4	
	A3	D1302-D2103	#5	13'-2"	21'-3"	1'-1 1/8"(-)	8	1	
	A4	D1302-D2103	#5	13'-2"	21'-3"	6 15/16"(-)	15	1	
PHASE 3	W3	C502-C705	#4	5'-2"	7'-5"	2'-3 11/16"(+)	2	4	
	W4	C206-C500	#4	2'-6"	5'-0"	6"	6	2	
	W5	D204-D501	#5	2'-4"	5'-1"	3"	12	2	

BENDING DIAGRAM

(DIMENSIONS ARE OUT TO OUT)

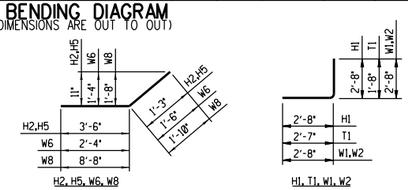

EST. WT. OF REINFORCING STEEL = 2,175 LB.

REINFORCING SCHEDULE - 6'-6" HEADWALL

PIPE DIAMETER = 60" SIDE SLOPE = 2:1

	BAR DESIGNATION	TOTAL	MARK	SIZE	LENGTH	SHAPE
PHASE 1	T1	56	C403B	#4	4'-3"	
	T2	6	C2605	#4	26'-5"	
PHASE 2	A1	32	D1008	#5	10'-8"	
	A5	4	C2605	#5	26'-5"	
	A6	2	D1501	#5	15'-1"	
	H1	32	D504B	#5	5'-4"	
	H2	8	D503B	#5	5'-3"	
	W1	18	C504B	#4	5'-4"	
	W2	36	D504B	#5	5'-4"	
PHASE 3	H3	32	D603	#5	6'-3"	
	H4	14	D1406	#5	14'-6"	
	H5	8	D503B	#5	5'-3"	
	W6	28	D310B	#5	3'-10"	
	W7	8	D1007	#5	10'-7"	
	W8	4	D1300B	#5	13'-0"	

SET LIST

	BAR DESIGNATION	MARK	SIZE	MIN. LENGTH	MAX. LENGTH	INCREMENT	NO.OF BARS/SET	NO.OF SETS	SHAPE
PHASE 2	A2	D205-D904	#5	2'-5"	9'-4"	1'-8 13/16"(-)	5	4	
	A3	D1508-D2601	#5	15'-8"	26'-1"	1'-1 1/8"(-)	10	1	
	A4	D1508-D2601	#5	15'-8"	26'-1"	6 15/16"(-)	19	1	
PHASE 3	W3	C502-C909	#4	5'-2"	9'-9"	2'-3 11/16"(+)	3	4	
	W4	C206-C600	#4	2'-6"	6'-0"	6"	8	2	
	W5	D204-D601	#5	2'-4"	6'-1"	3"	16	2	

BENDING DIAGRAM

(DIMENSIONS ARE OUT TO OUT)

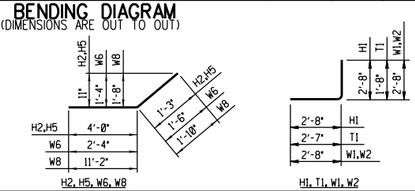

EST. WT. OF REINFORCING STEEL = 2,970 LB.

REINFORCING SCHEDULE - 7'-6" HEADWALL

PIPE DIAMETER = 72" SIDE SLOPE = 2:1

	BAR DESIGNATION	TOTAL	MARK	SIZE	LENGTH	SHAPE
PHASE 1	T1	66	C403B	#4	4'-3"	
	T2	6	C3103	#4	31'-3"	
PHASE 2	A1	38	D1208	#5	12'-8"	
	A5	4	D3103	#5	31'-3"	
	A6	2	D1707	#5	17'-7"	
	H1	38	D504B	#5	5'-4"	
	H2	8	D509B	#5	5'-9"	
	W1	22	C504B	#4	5'-4"	
	W2	44	D504B	#5	5'-4"	
PHASE 3	H3	38	D703	#5	7'-3"	
	H4	16	D1700	#5	17'-0"	
	H5	8	D509B	#5	5'-9"	
	W6	32	D310B	#5	3'-10"	
	W7	8	D1211	#5	12'-11"	
	W8	4	D1506B	#5	15'-6"	

SET LIST

	BAR DESIGNATION	MARK	SIZE	MIN. LENGTH	MAX. LENGTH	NCREMENT	NO.OF BARS/SET	NO.OF SETS	SHAPE
PHASE 2	A2	D208-D1104	#5	2'-8"	11'-4"	1'-8 13/16"(-)	6	4	
	A3	D1802-D3011	#5	18'-2"	30'-11"	1'-1 1/8"(-)	12	1	
	A4	D1802-D3011	#5	18'-2"	30'-11"	6 15/16"(-)	23	1	
PHASE 3	W3	C502-C1201	#4	5'-2"	12'-1"	2'-3 11/16"(+)	4	4	
	W4	C206-C700	#4	2'-6"	7'-0"	6"	10	2	
	W5	D204-D701	#5	2'-4"	7'-1"	3"	20	2	

BENDING DIAGRAM

(DIMENSIONS ARE OUT TO OUT)

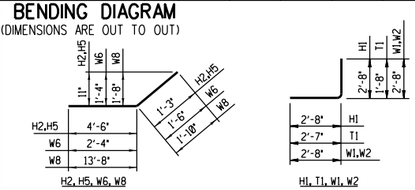

EST. WT. OF REINFORCING STEEL = 3,910 LB.

CONCRETE QUANTITIES

H	TOEWALL CU. YD.	APRON CU. YD.	HEADWALL & WINGWALLS CU. YD.	TOTAL CU. YD.
3'-6"	1.0	2.0	1.7	4.7
4'-0"	1.1	2.8	2.3	6.2
4'-6"	1.3	3.7	3.0	8.0
5'-6"	1.7	6.0	4.8	12.5
6'-6"	2.0	8.8	6.8	17.6
7'-6"	2.4	12.2	9.3	23.9

NOTES:

1. QUANTITIES ARE FOR ONE HEADWALL ONLY.
2. BAR DESIGNATIONS CONSIST OF BAR SIZE & LENGTH FOLLOWED BY THE LETTER "B" IF BENT. BAR SIZES ARE REPRESENTED BY THE LETTERS A THROUGH L CORRESPONDING TO BAR SIZE #2 THROUGH #18. BAR LENGTHS ARE GIVEN IN FEET AND INCHES; THE LAST TWO DIGITS ARE INCHES.
3. CONCRETE VOLUME FOR HEADWALL ASSUMES SOLID WALL WITHOUT A PIPE. TO DETERMINE REQUIRED CONCRETE QUANTITY, SUBTRACT THE APPLICABLE PIPE VOLUME AS FOLLOWS:

   24" DIA. = 0.11 CU. YD.
   30" DIA. = 0.18 CU. YD.
   36" DIA. = 0.26 CU. YD.
   48" DIA. = 0.46 CU. YD.
   60" DIA. = 0.72 CU. YD.
   72" DIA. = 1.04 CU. YD.

REINFORCING BAR LEGEND:

A - APRON BARS
H - HEADWALL BARS
T - TOEWALL BARS
W - WINGWALL BARS

A2 AND W3 CAN BE EITHER SINGLE BAR OR BAR SET.
W3 NOT REQUIRED IN 3'-6" HEADWALL.

REV.	DATE	DESCRIPTION	DES.	ENG.
X	XX-XX-XX	REVISION	XX	XX

DRAWN BY: SCRRA DATE: 03/31/2011

ASSISTANT DIRECTOR: STANDARDS & DESIGN

DIRECTOR OF ENGINEERING AND CONSTRUCTION

METROLINK®

SOUTHERN CALIFORNIA REGIONAL RAIL AUTHORITY
ONE GATEWAY PLAZA, 12TH FLOOR, L. A., CA. 90012

ENGINEERING STANDARDS

TYPE A-2 HEADWALL
REINFORCING SCHEDULE

STANDARD 6306
SCALE: NONE
REVISION –
SHEET 3 OF 3
CADD FILE: ES6306-03

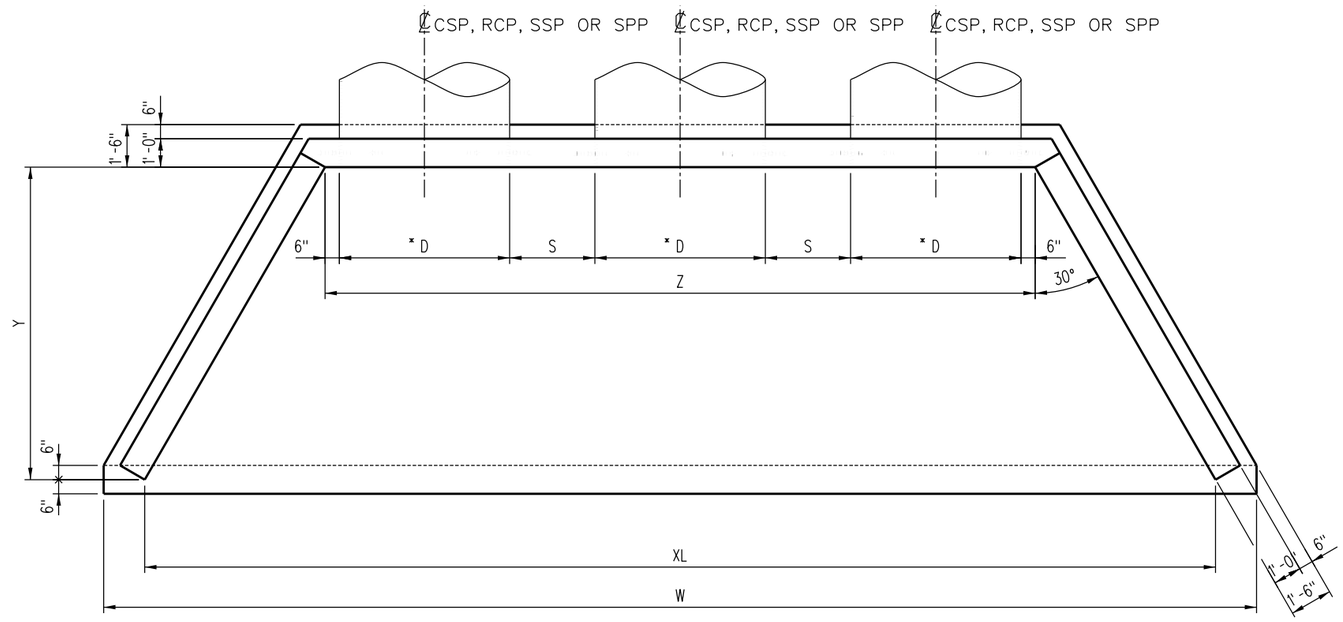

FRAMING PLAN
(72" DIA. PIPES SHOWN)

TYPE A-3 HEADWALL DIMENSIONS SIDE SLOPE = 2:1						
H	* D	S	W	XL	Z	Y
3'-6"	24"	12"	15'-4 1/4"	12'-5 5/8"	9'-0"	3'-0"
4'-0"	30"	15"	18'-6 1/8"	15'-7 3/8"	11'-0"	4'-0"
4'-6"	36"	18"	21'-7 7/8"	18'-9 1/4"	13'-0"	5'-0"
5'-6"	48"	24"	27'-11 5/8"	25'-1"	17'-0"	7'-0"
6'-6"	60"	30"	34'-3 3/8"	31'-4 3/4"	21'-0"	9'-0"
7'-6"	72"	36"	40'-7"	37'-8 3/8"	25'-0"	11'-0"

* FOR SSP & RCP, D = OUTSIDE PIPE DIAMETER
FOR CSP & SPP, D = INSIDE PIPE DIAMETER

NOTES:

1. EQUATIONS REQUIRE VARIABLES TO BE IN INCHES.
2. D = PIPE DIAMETER (INCHES)
   S = SPACING BETWEEN ADJACENT PIPES (INCHES)
   SS = SIDE SLOPE (RUN PER UNIT OF RISE)
3. Y = SS x (H - 24)
4. Z = (2 x D) + S + 12
5. XL = Z + (1.155 x Y)
6. W = XL + 34.641
7. ROUND DIMENSIONS TO THE NEAREST 1/8".

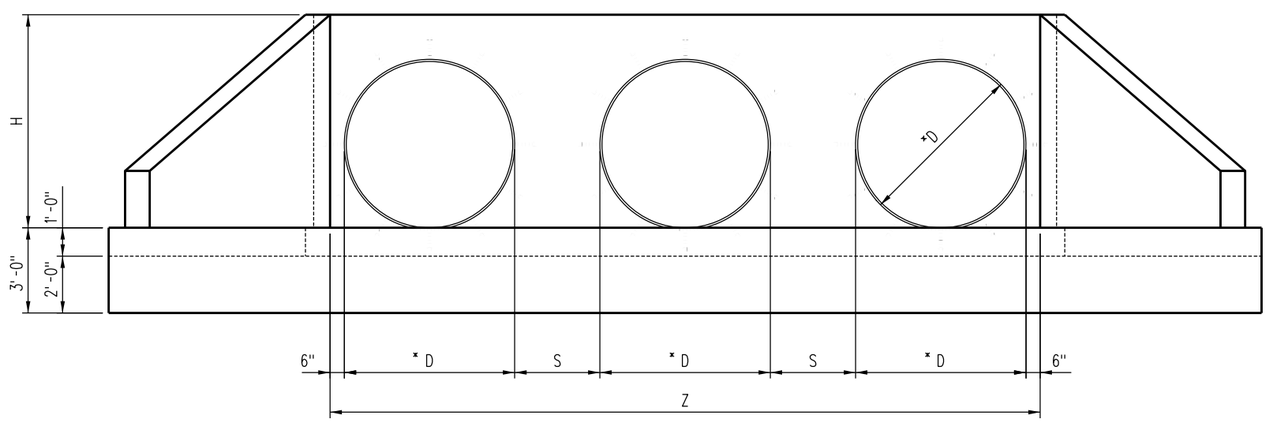

FRAMING ELEVATION
(72" DIA. PIPES SHOWN)

NOTES:

1. FOR CONCRETE SPECIFICATIONS, SEE ES6301 AND SCRRA STANDARD SPECIFICATIONS.
2. FOR PIPE BEDDING SPECIFICATIONS, SEE SCRRA STANDARD SPECIFICATION 33 42 00, CULVERT AND DRAINAGE PIPE.

REV.	DATE	DESCRIPTION	DES.	ENG.
B	09-14-16	REVISED PIPE BEDDING SPECIFICATION NOTE	AC	NDP
A	07-10-15	ADDED RCP TO PLAN AND NOTES	AC	NDP

DRAWN BY: SCRRA DATE: 03/31/2011

ASSISTANT DIRECTOR: STANDARDS & DESIGN

DIRECTOR OF ENGINEERING AND CONSTRUCTION

METROLINK®
SOUTHERN CALIFORNIA REGIONAL RAIL AUTHORITY
ONE GATEWAY PLAZA, 12TH FLOOR, L. A., CA. 90012

ENGINEERING STANDARDS

TYPE A-3 HEADWALL
FRAMING DETAILS

STANDARD 6308
SCALE: NONE
REVISION B
SHEET 1 OF 4
CADD FILE: ES6308-01

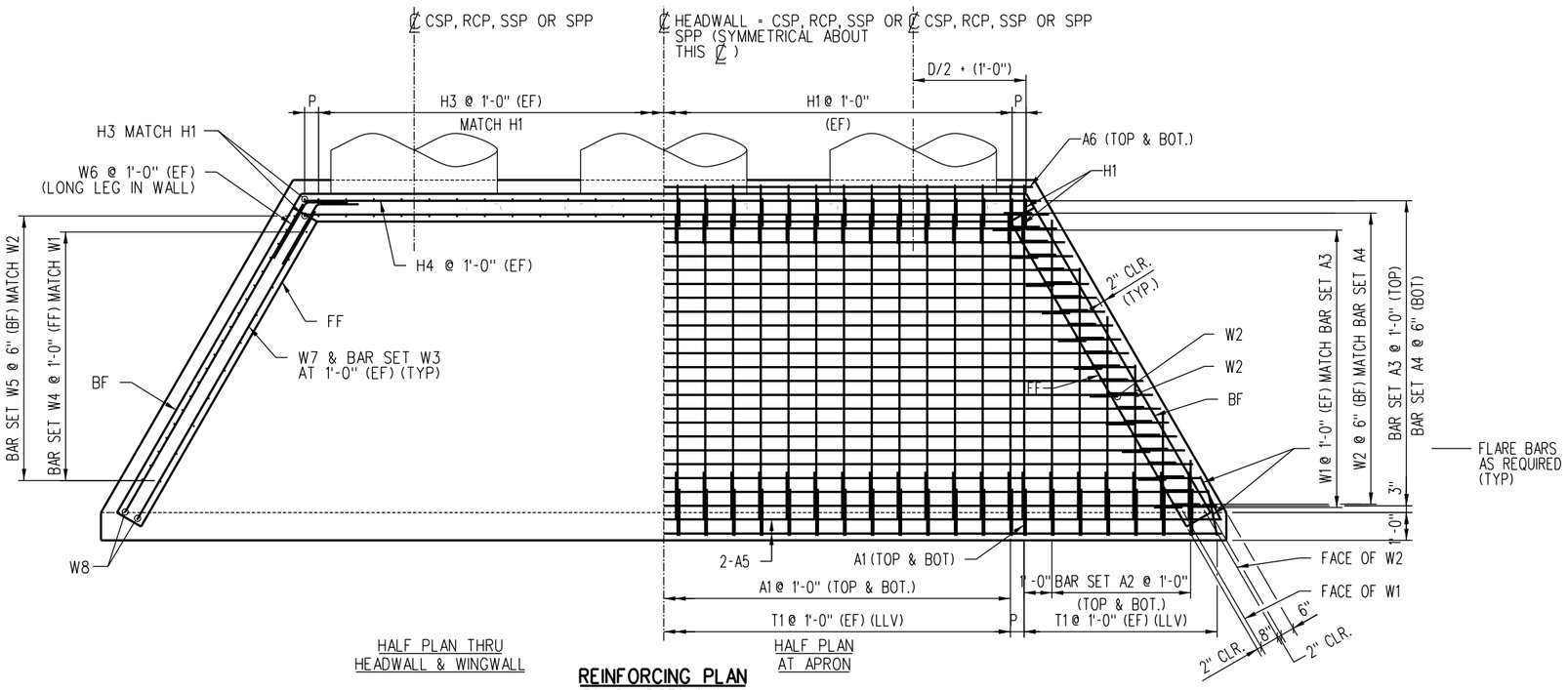

REINFORCING PLAN
(72" DIA. PIPES SHOWN)

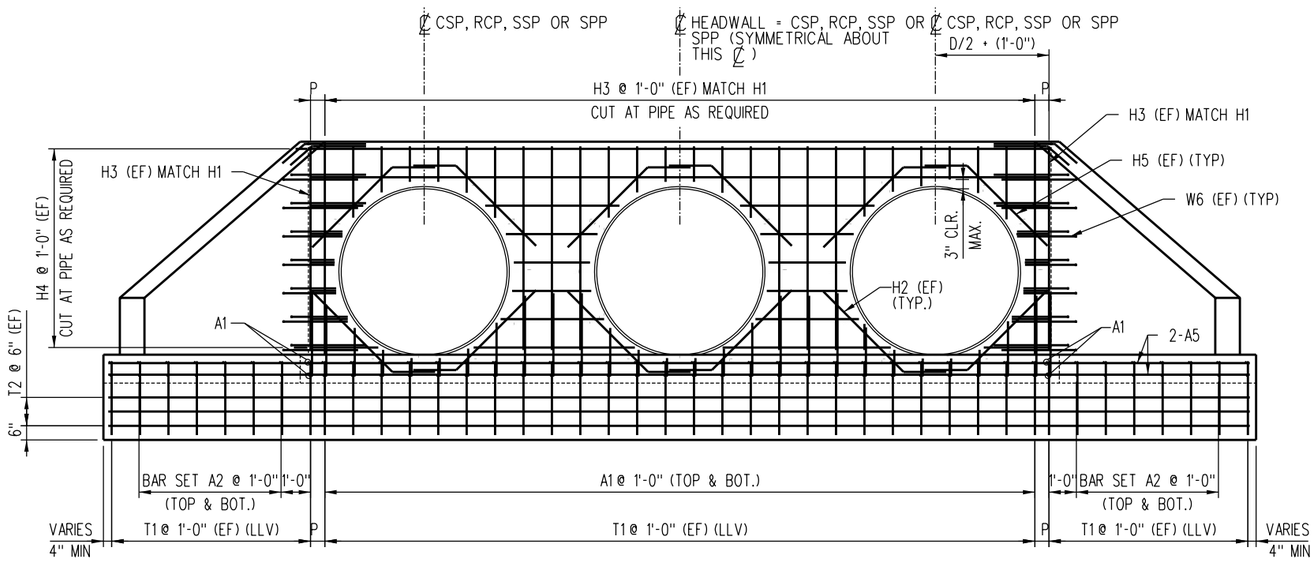

REINFORCING ELEVATION
(72" DIA. PIPES SHOWN)

NOTE:

BF = BACK FACE
EF = EACH FACE
FF = FRONT FACE
LLV = LONG LEG VERTICAL

H	P
3'-6"	6"
4'-0"	6"
4'-6"	6"
5'-6"	6"
6'-6"	6"
7'-6"	6"

NOTES:

1. REINFORCING CALLOUT CONVENTION:

   A - APRON BARS
   H - HEADWALL BARS
   T - TOEWALL BARS
   W - WINGWALL BARS

2. A2 AND W3 CAN BE EITHER SINGLE BAR OR BAR SET. W3 NOT REQUIRED IN 3'-6" HEADWALL.
3. EQUATIONS REQUIRE VARIABLES TO BE IN INCHES.
4. M = Z / 12 (ROUND M DOWN TO NEAREST INTEGER)
5. P = (Z / 2) - (6 x M) + 6 (ROUND P TO NEAREST 1/4")

REV.	DATE	DESCRIPTION	DES.	ENG.
A	07-10-15	ADDED RCP TO PLAN AND ELEVATION	AC	NDP

DRAWN BY: SCRRA DATE: 03/31/2011

ASSISTANT DIRECTOR: STANDARDS & DESIGN

DIRECTOR OF ENGINEERING AND CONSTRUCTION

METROLINK®
SOUTHERN CALIFORNIA REGIONAL RAIL AUTHORITY
ONE GATEWAY PLAZA, 12TH FLOOR, L. A., CA. 90012

ENGINEERING STANDARDS

TYPE A-3 HEADWALL
REINFORCING DETAILS

STANDARD: 6308
SCALE: NONE
REVISION: A
SHEET: 2 OF 4
CADD FILE: ES6308-02

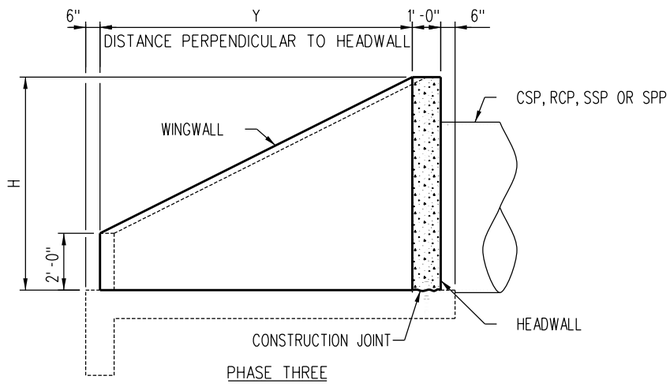

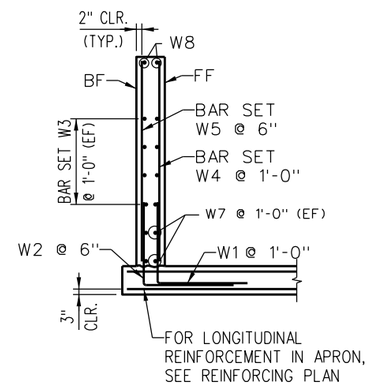

WINGWALL SECTION

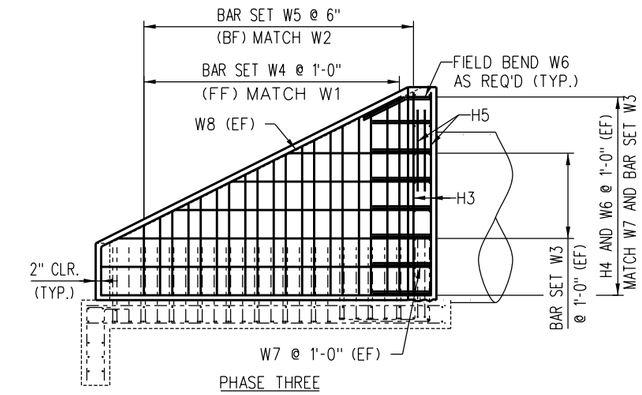

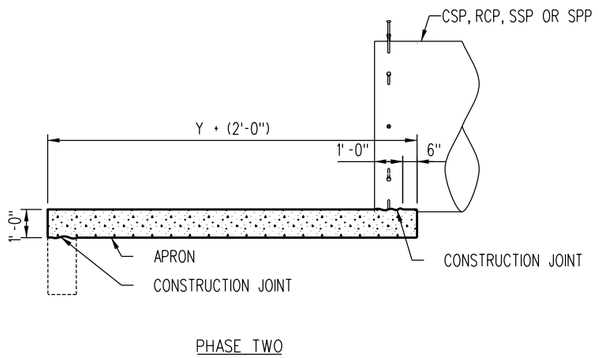

NOTE:

BF = BACK FACE
EF = EACH FACE
FF = FRONT FACE
LLV = LONG LEG VERTICAL

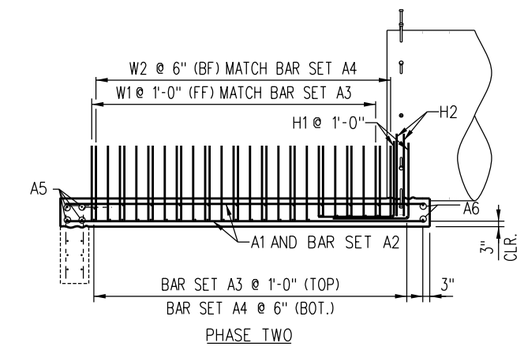

NOTE:

1. FOR CONCRETE SPECIFICATIONS, SEE ES6301 AND SCRRA STANDARD SPECIFICATIONS.
2. FOR PIPE BEDDING SPECIFICATIONS, SEE SCRRA STANDARD SPECIFICATION 34 80 12, CULVERT AND DRAINAGE PIPE.

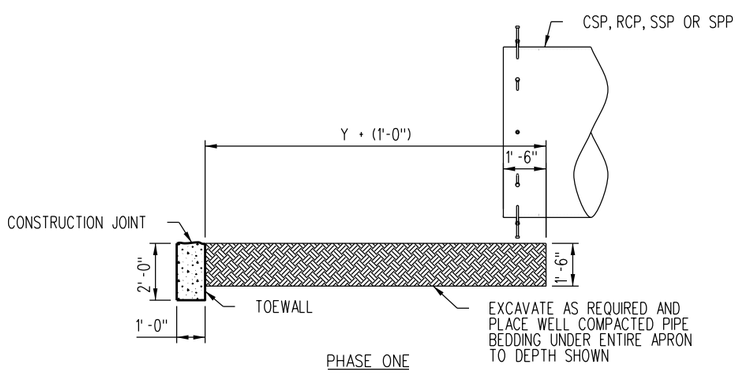

CONSTRUCTION SEQUENCE - FRAMING

(LOOKING PERPENDICULAR TO 'PIPE)
(72" DIA. PIPE SHOWN)

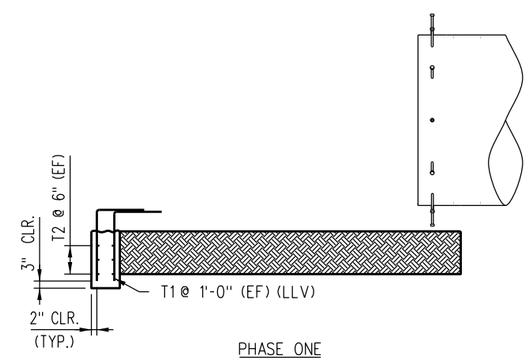

CONSTRUCTION SEQUENCE - REINFORCING

(LOOKING PERPENDICULAR TO PIPE)
(72" DIA. PIPE SHOWN)

REV.	DATE	DESCRIPTION	DES.	ENG.
A	07-10-15	ADDED RCP TO NOTES	AC	NDP

DRAWN BY: SCRRA DATE: 03/31/2011

ASSISTANT DIRECTOR: STANDARDS & DESIGN

DIRECTOR OF ENGINEERING AND CONSTRUCTION

METROLINK®
SOUTHERN CALIFORNIA REGIONAL RAIL AUTHORITY
ONE GATEWAY PLAZA, 12TH FLOOR, L. A., CA. 90012

ENGINEERING STANDARDS

TYPE A-3 HEADWALL
CONSTRUCTION SEQUENCE

STANDARD 6308
SCALE: NONE
REVISION A
SHEET 3 OF 4
CADD FILE: ES6308-03

REINFORCING SCHEDULE - 3'-6" HEADWALL

PIPE DIAMETER = 24" SIDE SLOPE = 2:1

	BAR DESIGNATION	TOTAL	MARK	SIZE	LENGTH	SHAPE
PHASE 1	T1	32	C403B	#4	4'-3"	
	T2	6	C1500	#4	15'-0"	
PHASE 2	A1	24	D408	#5	4'-8"	
	A2	4	D304	#5	3'-4"	
	A5	4	D1500	#5	15'-0"	
	A6	2	D1007	#5	10'-7"	
	H1	24	D504B	#5	5'-4"	
	H2	12	D309B	#5	3'-9"	
	W1	6	C504B	#4	5'-4"	
	W2	12	D504B	#5	5'-4"	
PHASE 3	H3	24	D303	#5	3'-3"	
	H4	8	D1000	#5	10'-0"	
	H5	12	D309B	#5	3'-9"	
	W6	16	D310B	#5	3'-10"	
	W7	8	D308	#5	3'-8"	
	W8	4	D505B	#5	5'-5"	

SET LIST

	BAR DESIGNATION	MARK	SIZE	MIN. LENGTH	MAX. LENGTH	INCREMENT	NO.OF BARS/SET	NO.OF SETS	SHAPE
PHASE 2	A3	D1102-D1408	#5	11'-2"	14'-8"	1'-1 1/8"(-)	4	1	
	A4	D1102-D1408	#5	11'-2"	14'-8"	6 15/16"(-)	7	1	
PHASE 3	W4	C206-C300	#4	2'-6"	3'-0"	6"	2	2	
	W5	D204-D301	#5	2'-4"	3'-1"	3"	4	2	

BENDING DIAGRAM

(DIMENSIONS ARE OUT TO OUT)

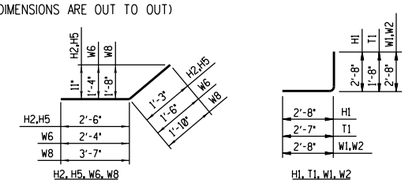

EST. WT. OF REINFORCING STEEL = 1,145 LB.

REINFORCING SCHEDULE - 4'-0" HEADWALL

PIPE DIAMETER = 30" SIDE SLOPE = 2:1

	BAR DESIGNATION	TOTAL	MARK	SIZE	LENGTH	SHAPE
PHASE 1	T1	40	C403B	#4	4'-3"	
	T2	6	C1802	#4	18'-2"	
PHASE 2	A1	28	D508	#5	5'-8"	
	A5	4	D1802	#5	18'-2"	
	A6	2	D1207	#5	12'-7"	
	H1	20	D504B	#5	5'-4"	
	H2	12	D400B	#5	4'-0"	
	W1	8	C504B	#4	5'-4"	
	W2	16	D504B	#5	5'-4"	
PHASE 3	H3	28	D309	#5	3'-9"	
	H4	10	D1200	#5	12'-0"	
	H5	12	D400B	#5	4'-0"	
	W3	4	C400	#4	4'-0"	
	W6	20	D310B	#5	3'-10"	
	W7	8	D410	#5	4'-10"	
	W8	4	D608B	#5	6'-8"	

SET LIST

	BAR DESIGNATION	MARK	SIZE	MIN. LENGTH	MAX. LENGTH	INCREMENT	NO.OF BARS/SET	NO.OF SETS	SHAPE
PHASE 2	A2	D208-D404	#5	2'-8"	4'-4"	1'-8 13/16"(-)	2	4	
	A3	D1302-D1710	#5	13'-2"	17'-10"	1'-1 1/8"(-)	5	1	
	A4	D1302-D1710	#5	13'-2"	17'-10"	6 15/16"(-)	9	1	
PHASE 3	W4	C206-C306	#4	2'-6"	3'-6"	6"	3	2	
	W5	D204-D307	#5	2'-4"	3'-7"	3"	6	2	

BENDING DIAGRAM

(DIMENSIONS ARE OUT TO OUT)

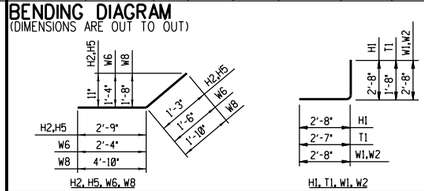

EST. WT. OF REINFORCING STEEL = 1,530LB.

REINFORCING SCHEDULE - 4'-6" HEADWALL

PIPE DIAMETER = 36" SIDE SLOPE = 2:1

	BAR DESIGNATION	TOTAL	MARK	SIZE	LENGTH	SHAPE
PHASE 1	T1	44	C403B	#4	4'-3"	
	T2	6	C2103	#4	21'-3"	
PHASE 2	A1	32	D608	#5	6'-8"	
	A5	4	D2103	#5	21'-3"	
	A6	2	D1407	#5	14'-7"	
	H1	32	D504B	#5	5'-4"	
	H2	12	D403B	#5	4'-3"	
	W1	10	C504B	#4	5'-4"	
	W2	20	D504B	#5	5'-4"	
PHASE 3	H3	32	D403	#5	4'-3"	
	H4	10	D1400	#5	14'-0"	
	H5	12	D403B	#5	4'-3"	
	W3	4	C502	#4	5'-2"	
	W6	20	D310B	#5	3'-10"	
	W7	8	D511	#5	5'-11"	
	W8	4	D800B	#5	8'-0"	

SET LIST

	BAR DESIGNATION	MARK	SIZE	MIN. LENGTH	MAX. LENGTH	INCREMENT	NO.OF BARS/SET	NO.OF SETS	SHAPE
PHASE 2	A2	D308-D504	#5	3'-8"	5'-4"	1'-8 13/16"(-)	2	4	
	A3	D1502-D2011	#5	15'-2"	20'-11"	1'-1 1/8"(-)	6	1	
	A4	D1502-D2011	#5	15'-2"	20'-11"	6 15/16"(-)	11	1	
PHASE 3	W4	C206-C400	#4	2'-6"	4'-0"	6"	4	2	
	W5	D204-D401	#5	2'-4"	4'-1"	3"	8	2	

BENDING DIAGRAM

(DIMENSIONS ARE OUT TO OUT)

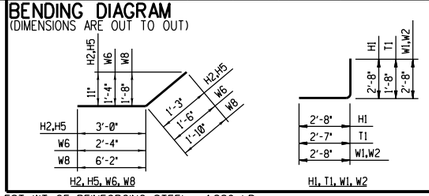

EST. WT. OF REINFORCING STEEL = 1,880 LB.

REINFORCING SCHEDULE - 5'-6" HEADWALL

PIPE DIAMETER = 48" SIDE SLOPE = 2:1

	BAR DESIGNATION	TOTAL	MARK	SIZE	LENGTH	SHAPE
PHASE 1	T1	56	C403B	#4	4'-3"	
	T2	6	C2707	#4	27'-7"	
PHASE 2	A1	40	D808	#5	8'-8"	
	A5	4	D2707	#5	27'-7"	
	A6	2	D1807	#5	18'-7"	
	H1	40	D504B	#5	5'-4"	
	H2	12	D409B	#5	4'-9"	
	W1	14	C504B	#4	5'-4"	
	W2	28	D504B	#5	5'-4"	
PHASE 3	H3	40	D503	#5	5'-3"	
	H4	12	D1800	#5	18'-0"	
	H5	12	D409B	#5	4'-9"	
	W6	24	D310B	#5	3'-10"	
	W7	8	D803	#5	8'-3"	
	W8	4	D1006B	#5	10'-6"	

SET LIST

	BAR DESIGNATION	MARK	SIZE	MIN. LENGTH	MAX. LENGTH	INCREMENT	NO.OF BARS/SET	NO.OF SETS	SHAPE
PHASE 2	A2	D311-D704	#5	3'-11"	7'-4"	1'-8 13/16"(-)	3	4	
	A3	D1902-D2703	#5	19'-2"	27'-3"	1'-1 1/8"(-)	8	1	
	A4	D1902-D2703	#5	19'-2"	27'-3"	6 15/16"(-)	15	1	
PHASE 3	W3	C502-C705	#4	5'-2"	7'-5"	2'-3 11/16"(+)	2	4	
	W4	C206-C500	#4	2'-6"	5'-0"	6"	6	2	
	W5	D204-D501	#5	2'-4"	5'-1"	3"	12	2	

BENDING DIAGRAM

(DIMENSIONS ARE OUT TO OUT)

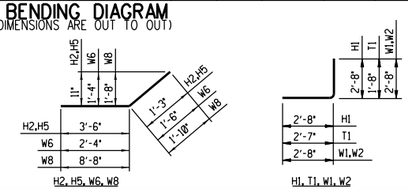

EST. WT. OF REINFORCING STEEL = 2,770 LB.

REINFORCING SCHEDULE - 6'-6" HEADWALL

PIPE DIAMETER = 60" SIDE SLOPE = 2:1

	BAR DESIGNATION	TOTAL	MARK	SIZE	LENGTH	SHAPE
PHASE 1	T1	72	C403B	#4	4'-3"	
	T2	6	C3311	#4	33'-11"	
PHASE 2	A1	48	D1008	#5	10'-8"	
	A5	4	C3311	#5	33'-11"	
	A6	2	D2207	#5	22'-7"	
	H1	48	D504B	#5	5'-4"	
	H2	12	D503B	#5	5'-3"	
	W1	18	C504B	#4	5'-4"	
	W2	36	D504B	#5	5'-4"	
PHASE 3	H3	48	D603	#5	6'-3"	
	H4	14	D2200	#5	22'-0"	
	H5	12	D503B	#5	5'-3"	
	W6	28	D310B	#5	3'-10"	
	W7	8	D1007	#5	10'-7"	
	W8	4	D1300B	#5	13'-0"	

SET LIST

	BAR DESIGNATION	MARK	SIZE	MIN. LENGTH	MAX. LENGTH	INCREMENT	NO.OF BARS/SET	NO.OF SETS	SHAPE
PHASE 2	A2	D205-D904	#5	2'-5"	9'-4"	1'-8 13/16"(-)	5	4	
	A3	D2302-D3307	#5	23'-2"	33'-7"	1'-1 1/8"(-)	10	1	
	A4	D2302-D3307	#5	23'-2"	33'-7"	6 15/16"(-)	19	1	
PHASE 3	W3	C502-C909	#4	5'-2"	9'-9"	2'-3 11/16"(+)	3	4	
	W4	C206-C600	#4	2'-6"	6'-0"	6"	8	2	
	W5	D204-D601	#5	2'-4"	6'-1"	3"	16	2	

BENDING DIAGRAM

(DIMENSIONS ARE OUT TO OUT)

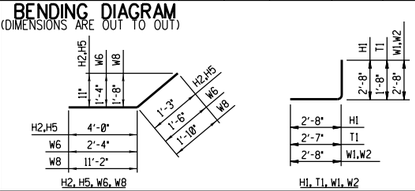

EST. WT. OF REINFORCING STEEL = 3,845 LB.

REINFORCING SCHEDULE - 7'-6" HEADWALL

PIPE DIAMETER = 72" SIDE SLOPE = 2:1

	BAR DESIGNATION	TOTAL	MARK	SIZE	LENGTH	SHAPE
PHASE 1	T1	84	C403B	#4	4'-3"	
	T2	6	C4003	#4	40'-3"	
PHASE 2	A1	56	D1208	#5	12'-8"	
	A5	4	D4003	#5	40'-3"	
	A6	2	D2607	#5	26'-7"	
	H1	56	D504B	#5	5'-4"	
	H2	12	D509B	#5	5'-9"	
	W1	22	C504B	#4	5'-4"	
	W2	44	D504B	#5	5'-4"	
PHASE 3	H3	56	D703	#5	7'-3"	
	H4	16	D2600	#5	26'-0"	
	H5	12	D509B	#5	5'-9"	
	W6	32	D310B	#5	3'-10"	
	W7	8	D1211	#5	12'-11"	
	W8	4	D1506B	#5	15'-6"	

SET LIST

	BAR DESIGNATION	MARK	SIZE	MIN. LENGTH	MAX. LENGTH	NCREMENT	NO.OF BARS/SET	NO.OF SETS	SHAPE
PHASE 2	A2	D208-D1104	#5	2'-8"	11'-4"	1'-8 13/16"(-)	6	4	
	A3	D2702-D3911	#5	27'-2"	39'-11"	1'-1 1/8"(-)	12	1	
	A4	D2702-D3911	#5	27'-2"	39'-11"	6 15/16"(-)	23	1	
PHASE 3	W3	C502-C1201	#4	5'-2"	12'-1"	2'-3 11/16"(+)	4	4	
	W4	C206-C700	#4	2'-6"	7'-0"	6"	10	2	
	W5	D204-D701	#5	2'-4"	7'-1"	3"	20	2	

BENDING DIAGRAM

(DIMENSIONS ARE OUT TO OUT)

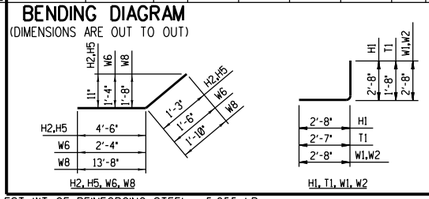

EST. WT. OF REINFORCING STEEL = 5,055 LB.

CONCRETE QUANTITIES

H	TOEWALL CU. YD.	APRON CU. YD.	HEADWALL & WINGWALLS CU. YD.	TOTAL CU. YD.
3'-6"	1.2	2.6	2.1	5.9
4'-0"	1.4	3.6	2.9	7.9
4'-6"	1.7	4.9	3.8	10.4
5'-6"	2.1	8.0	6.0	16.1
6'-6"	2.6	11.9	8.7	23.2
7'-6"	3.1	16.5	11.8	31.4

NOTES:

1. QUANTITIES ARE FOR ONE HEADWALL ONLY.
2. BAR DESIGNATIONS CONSIST OF BAR SIZE & LENGTH FOLLOWED BY THE LETTER "B" IF BENT. BAR SIZES ARE REPRESENTED BY THE LETTERS A THROUGH L CORRESPONDING TO BAR SIZE #2 THROUGH #18. BAR LENGTHS ARE GIVEN IN FEET AND INCHES; THE LAST TWO DIGITS ARE INCHES.
3. CONCRETE VOLUME FOR HEADWALL ASSUMES SOLID WALL WITHOUT A PIPE. TO DETERMINE REQUIRED CONCRETE QUANTITY, SUBTRACT THE APPLICABLE PIPE VOLUME AS FOLLOWS:

   24" DIA. = 0.11 CU. YD.
   30" DIA. = 0.18 CU. YD.
   36" DIA. = 0.26 CU. YD.
   48" DIA. = 0.46 CU. YD.
   60" DIA. = 0.72 CU. YD.
   72" DIA. = 1.04 CU. YD.

REINFORCING BAR LEGEND:

A - APRON BARS
H - HEADWALL BARS
T - TOEWALL BARS
W - WINGWALL BARS

A2 AND W3 CAN BE EITHER SINGLE BAR OR BAR SET.
W3 NOT REQUIRED IN 3'-6" HEADWALL.

REV.	DATE	DESCRIPTION	DES.	ENG.
X	XX-XX-XX	REVISION	XX	XX

DRAWN BY: SCRRA DATE: 03/31/2011

ASSISTANT DIRECTOR: STANDARDS & DESIGN

DIRECTOR OF ENGINEERING AND CONSTRUCTION

METROLINK®
SOUTHERN CALIFORNIA REGIONAL RAIL AUTHORITY
ONE GATEWAY PLAZA, 12TH FLOOR, L. A., CA. 90012

ENGINEERING STANDARDS

TYPE A-3 HEADWALL
REINFORCING SCHEDULE

STANDARD 6308
SCALE: NONE
REVISION –
SHEET 4 OF 4
CADD FILE: ES6308-04

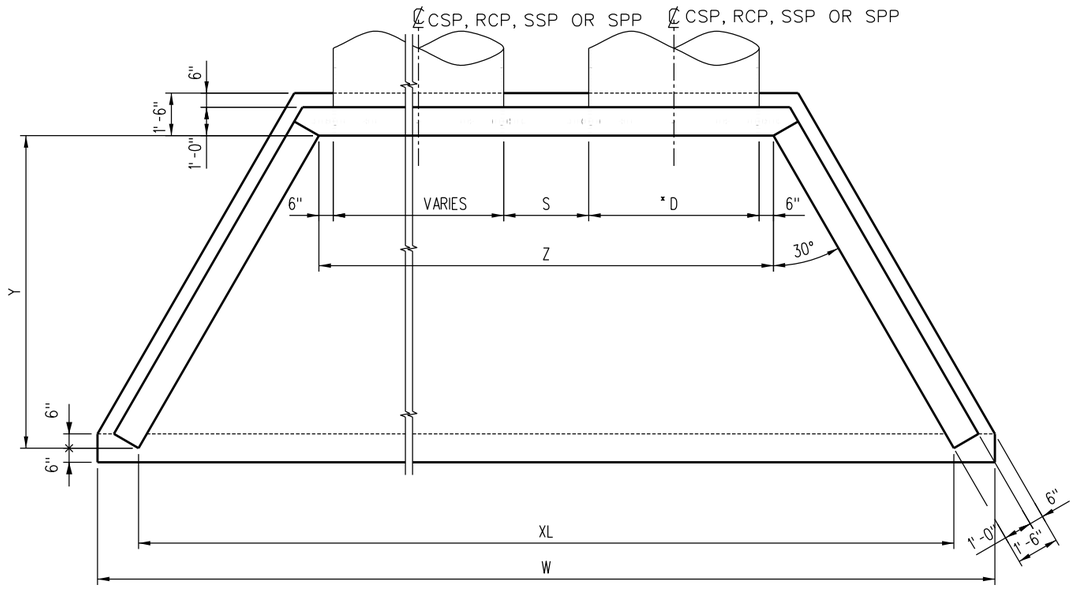

FRAMING PLAN
(72" DIA. PIPES SHOWN)

NOTES:

1. EQUATIONS REQUIRE VARIABLES TO BE IN INCHES.
2. D = PIPE DIAMETER (INCHES)
   N = NUMBER OF PIPES
   S = SPACING BETWEEN ADJACENT PIPES (INCHES)
   SS = SIDE SLOPE (RUN PER UNIT OF RISE)
3. Y = SS x (H - 24)
4. Z = (2 x D) + S + 12
5. XL = Z + (1.155 x Y)
6. W = XL + 34.641
7. ROUND DIMENSIONS TO THE NEAREST 1/8".

NOTES:

1. FOR CONCRETE SPECIFICATIONS, SEE ES6301 AND SCRRA STANDARD SPECIFICATIONS.
2. FOR PIPE BEDDING SPECIFICATIONS, SEE SCRRA STANDARD SPECIFICATION 33 42 00, CULVERT AND DRAINAGE PIPE.

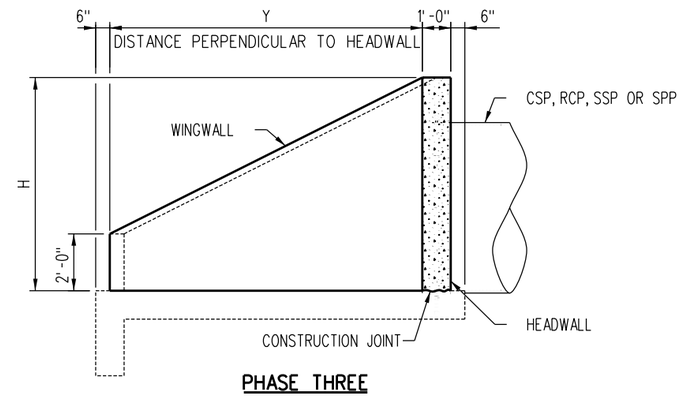

PHASE THREE

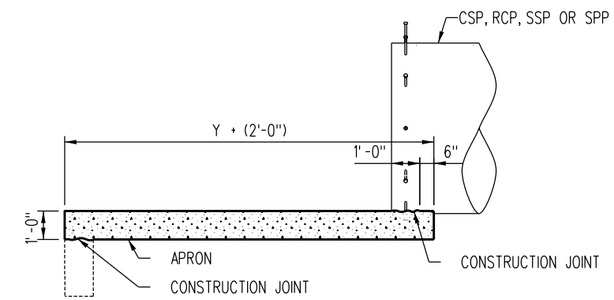

PHASE TWO

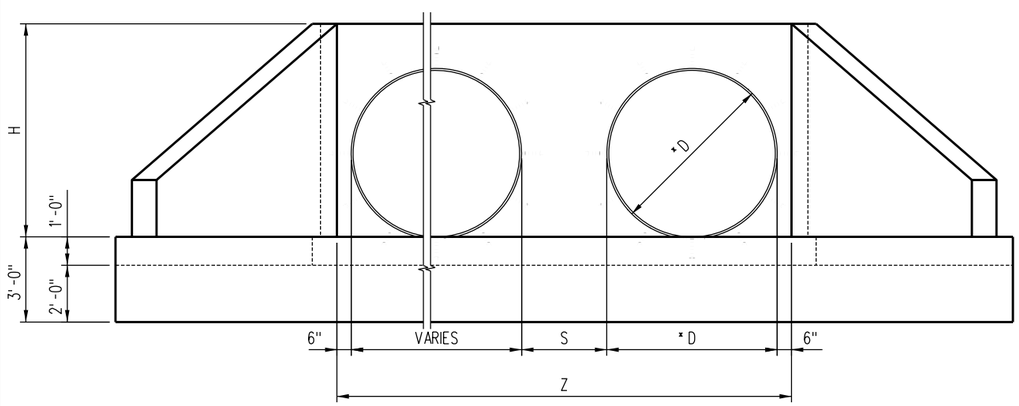

FRAMING ELEVATION
(72" DIA. PIPES SHOWN)

TYPE A-M HEADWALL DIMENSIONS
SIDE SLOPE = 2:1

H	*D	Y
3'-6"	24"	3'-0"
4'-0"	30"	4'-0"
4'-6"	36"	5'-0"
5'-6"	48"	7'-0"
6'-6"	60"	9'-0"
7'-6"	72"	11'-0"

* FOR SSP, D = OUTSIDE PIPE DIAMETER FOR CSP & SPP, D = INSIDE PIPE DIAMETER

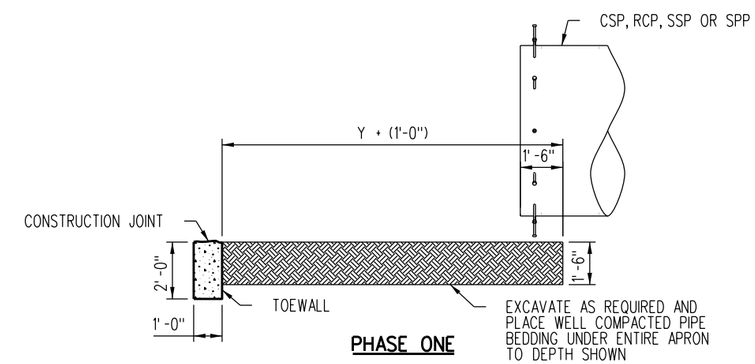

PHASE ONE

CONSTRUCTION SEQUENCE
(LOOKING PERPENDICULAR TO ' PIPE)
(72" DIA. PIPE SHOWN)

REV.	DATE	DESCRIPTION	DES.	ENG.
B	09-14-16	REVISED PIPE BEDDING SPECIFICATIONS NOTE	AC	NDP
A	07-10-15	ADDED RCP TO NOTES	AC	NDP

DRAWN BY: SCRRA DATE: 03/31/2011

ASSISTANT DIRECTOR: STANDARDS & DESIGN

DIRECTOR OF ENGINEERING AND CONSTRUCTION

METROLINK®
SOUTHERN CALIFORNIA REGIONAL RAIL AUTHORITY
ONE GATEWAY PLAZA, 12TH FLOOR, L. A., CA. 90012

ENGINEERING STANDARDS

TYPE A-M HEADWALL
FRAMING DETAILS

STANDARD 6310
SCALE: NONE
REVISION B SHEET 1 OF 3
CADD FILE: ES6310-01

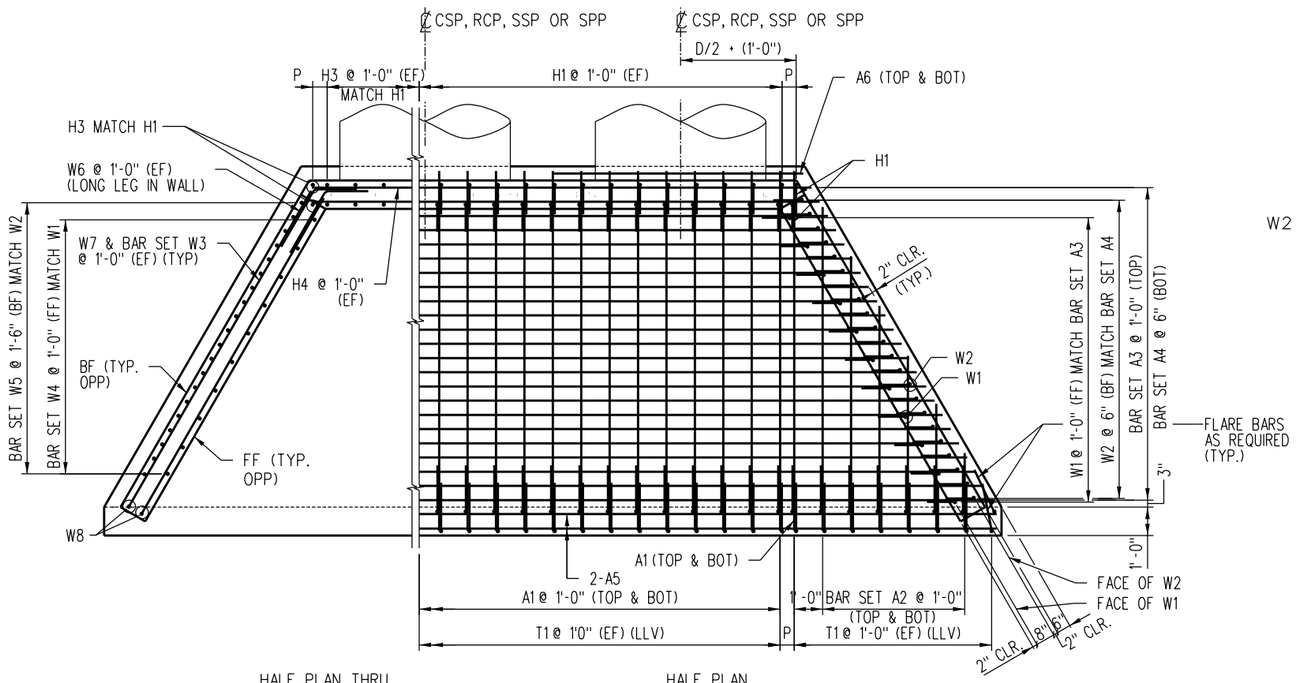

HALF PLAN THRU HEADWALL & WINGWALL

HALF PLAN AT APRON

REINFORCING PLAN
(72" DIA. PIPES SHOWN)

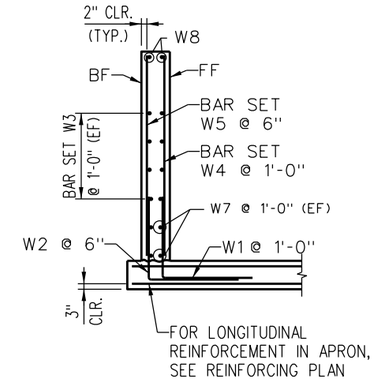

WINGWALL SECTION

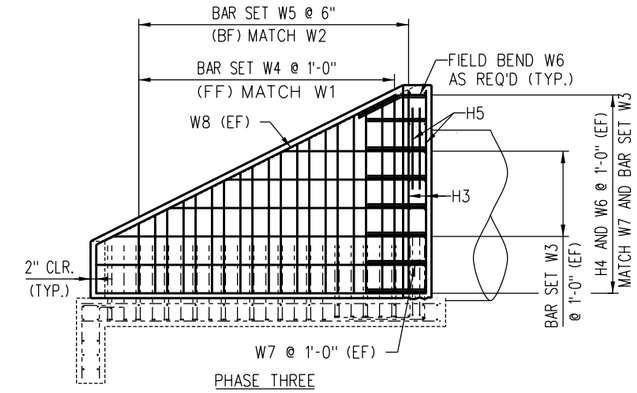

PHASE THREE

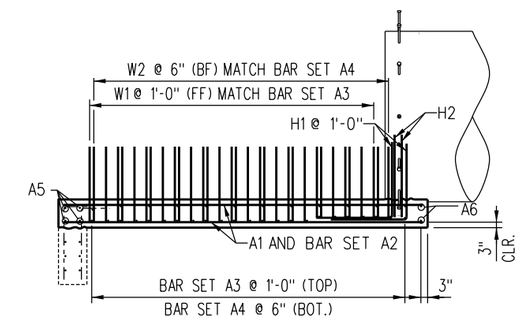

PHASE TWO

NOTE:

BF = BACK FACE
EF = EACH FACE
FF = FRONT FACE
LLV = LONG LEG VERTICAL

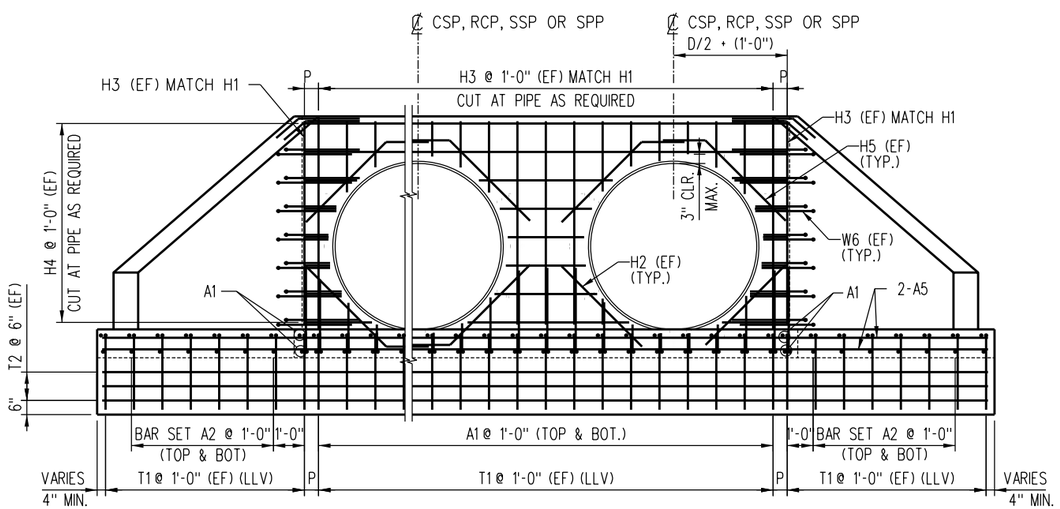

REINFORCING ELEVATION
(72" DIA. PIPES SHOWN)

NOTES:

1. REINFORCING CALLOUT CONVENTION:

   A - APRON BARS
   H - HEADWALL BARS
   T - TOEWALL BARS
   W - WINGWALL BARS

2. A2 AND W3 CAN BE EITHER SINGLE BAR OR BAR SET. W3 NOT REQUIRED IN 3'-6" HEADWALL.
3. EQUATIONS REQUIRE VARIABLES TO BE IN INCHES.
4. M = Z / 12 (ROUND M DOWN TO NEAREST INTEGER)
5. P = (Z / 2) - (6 x M) + 6 (ROUND P TO NEAREST 1/4")

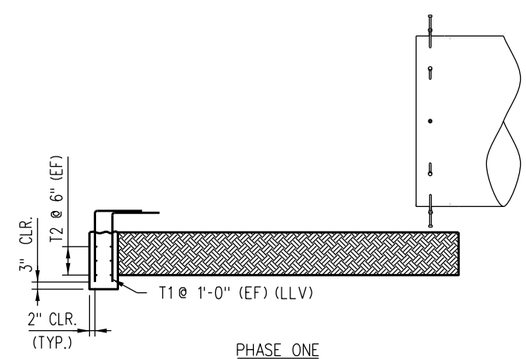

PHASE ONE

CONSTRUCTION SEQUENCE
(LOOKING PERPENDICULAR TO PIPE)
(72" DIA. PIPE SHOWN)

REV.	DATE	DESCRIPTION	DES.	ENG.
A	07-10-15	ADDED RCP TO NOTES	AC	NDP

DRAWN BY: SCRRA DATE: 03/31/2011

ASSISTANT DIRECTOR: STANDARDS & DESIGN

DIRECTOR OF ENGINEERING AND CONSTRUCTION

METROLINK®
SOUTHERN CALIFORNIA REGIONAL RAIL AUTHORITY
ONE GATEWAY PLAZA, 12TH FLOOR, L. A., CA. 90012

ENGINEERING STANDARDS

TYPE A–M HEADWALL
REINFORCING DETAILS

STANDARD 6310
SCALE: NONE
REVISION A
SHEET 2 OF 3
CADD FILE: ES6310–02

REINFORCING SCHEDULE - 3'-6" HEADWALL

PIPE DIAMETER = 24" SIDE SLOPE = 2:1

	BAR DESIGNATION	TOTAL	MARK	SIZE	LENGTH	SHAPE
PHASE 1	T1	A	C403B	#4	4'-3"	
	T2	6		#4	Q	
PHASE 2	A1	B	D408	#5	4'-8"	
	A2	4	D304	#5	3'-4"	
	A5	4		#5	Q	
	A6	2		#5	R	
	H1	B	D504B	#5	5'-4"	
	H2	E	D309B	#5	3'-9"	
	W1	6	C504B	#4	5'-4"	
	W2	12	D504B	#5	5'-4"	
PHASE 3	H3	B	D303	#5	3'-3"	
	H4	8		#5	T	
	H5	E	D309B	#5	3'-9"	
	W6	16	D310B	#5	3'-10"	
	W7	8	D308	#5	3'-8"	
	W8	4	D505B	#5	5'-5"	

SET LIST

	BAR DESIGNATION	MARK	SIZE	MIN. LENGTH	MAX. LENGTH	INCREMENT	NO.OF BARS/SET	NO.OF SETS	SHAPE
PHASE 2	A3		#5	U	V	1'-1 7/8"(-)	4	1	
	A4		#5	U	V	6 15/16"(-)	7	1	
PHASE 3	W4	C206-C300	#4	2'-6"	3'-0"	6"	2	2	
	W5	D204-D301	#5	2'-4"	3'-1"	3"	4	2	

BENDING DIAGRAM

(DIMENSIONS ARE OUT TO OUT)

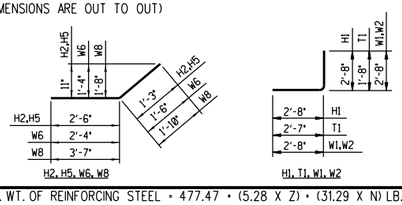

EST. WT. OF REINFORCING STEEL = 477.47 + (5.28 X Z) + (31.29 X N) LB.

REINFORCING SCHEDULE - 4'-0" HEADWALL

PIPE DIAMETER = 30" SIDE SLOPE = 2:1

	BAR DESIGNATION	TOTAL	MARK	SIZE	LENGTH	SHAPE
PHASE 1	T1	A	C403B	#4	4'-3"	
	T2	6		#4	Q	
PHASE 2	A1	B	D508	#5	5'-8"	
	A5	4		#5	Q	
	A6	2		#5	R	
	H1	B	D504B	#5	5'-4"	
	H2	E	D400B	#5	4'-0"	
	W1	8	C504B	#4	5'-4"	
	W2	16	D504B	#5	5'-4"	
PHASE 3	H3	B	D309	#5	3'-9"	
	H4	10		#5	T	
	H5	E	D400B	#5	4'-0"	
	W3	4	C400	#4	4'-0"	
	W6	20	D310B	#5	3'-10"	
	W7	8	D410	#5	4'-10"	
	W8	4	D608B	#5	6'-8"	

SET LIST

	BAR DESIGNATION	MARK	SIZE	MIN. LENGTH	MAX. LENGTH	INCREMENT	NO.OF BARS/SET	NO.OF SETS	SHAPE
PHASE 2	A2	D208-D404	#5	2'-8"	4'-4"	1'-8 13/16"(-)	2	4	
	A3		#5	U	V	1'-1 7/8"(-)	5	1	
	A4		#5	U	V	6 15/16"(-)	9	1	
PHASE 3	W4	C206-C306	#4	2'-6"	3'-6"	6"	3	2	
	W5	D204-D307	#5	2'-4"	3'-7"	3"	6	2	

BENDING DIAGRAM

(DIMENSIONS ARE OUT TO OUT)

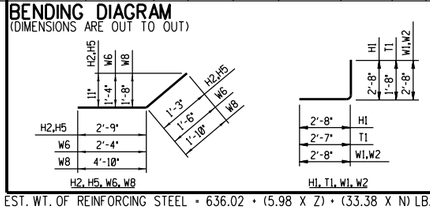

EST. WT. OF REINFORCING STEEL = 636.02 + (5.98 X Z) + (33.38 X N) LB.

REINFORCING SCHEDULE - 4'-6" HEADWALL

PIPE DIAMETER = 36" SIDE SLOPE = 2:1

	BAR DESIGNATION	TOTAL	MARK	SIZE	LENGTH	SHAPE
PHASE 1	T1	A	C403B	#4	4'-3"	
	T2	6		#4	Q	
PHASE 2	A1	B	D608	#5	6'-8"	
	A5	4		#5	Q	
	A6	2		#5	R	
	H1	B	D504B	#5	5'-4"	
	H2	E	D403B	#5	4'-3"	
	W1	10	C504B	#4	5'-4"	
	W2	20	D504B	#5	5'-4"	
PHASE 3	H3	B	D403	#5	4'-3"	
	H4	10		#5	T	
	H5	E	D403B	#5	4'-3"	
	W3	4	C502	#4	5'-2"	
	W6	20	D310B	#5	3'-10"	
	W7	8	D511	#5	5'-11"	
	W8	4	D800B	#5	8'-0"	

SET LIST

	BAR DESIGNATION	MARK	SIZE	MIN. LENGTH	MAX. LENGTH	INCREMENT	NO.OF BARS/SET	NO.OF SETS	SHAPE
PHASE 2	A2	D308-D504	#5	3'-8"	5'-4"	1'-8 13/16"(-)	2	4	
	A3		#5	U	V	1'-1 7/8"(-)	6	1	
	A4		#5	U	V	6 15/16"(-)	11	1	
PHASE 3	W4	C206-C400	#4	2'-6"	4'-0"	6"	4	2	
	W5	D204-D401	#5	2'-4"	4'-1"	3"	8	2	

BENDING DIAGRAM

(DIMENSIONS ARE OUT TO OUT)

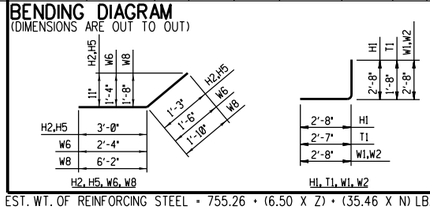

EST. WT. OF REINFORCING STEEL = 755.26 + (6.50 X Z) + (35.46 X N) LB.

REINFORCING SCHEDULE - 5'-6" HEADWALL

PIPE DIAMETER = 48" SIDE SLOPE = 2:1

	BAR DESIGNATION	TOTAL	MARK	SIZE	LENGTH	SHAPE
PHASE 1	T1	A	C403B	#4	4'-3"	
	T2	6		#4	Q	
PHASE 2	A1	B	D808	#5	8'-8"	
	A5	4		#5	Q	
	A6	2		#5	R	
	H1	B	D504B	#5	5'-4"	
	H2	E	D409B	#5	4'-9"	
	W1	14	C504B	#4	5'-4"	
	W2	28	D504B	#5	5'-4"	
PHASE 3	H3	B	D503	#5	5'-3"	
	H4	12		#5	T	
	H5	E	D409B	#5	4'-9"	
	W6	24	D310B	#5	3'-10"	
	W7	8	D803	#5	8'-3"	
	W8	4	D1006B	#5	10'-6"	

SET LIST

	BAR DESIGNATION	MARK	SIZE	MIN. LENGTH	MAX. LENGTH	INCREMENT	NO.OF BARS/SET	NO.OF SETS	SHAPE
PHASE 2	A2	D311-D704	#5	3'-11"	7'-4"	1'-8 13/16"(-)	3	4	
	A3		#5	U	V	1'-1 7/8"(-)	8	1	
	A4		#5	U	V	6 15/16"(-)	15	1	
PHASE 3	W3	C502-C705	#4	5'-2"	7'-5"	2'-3 11/16"(+)	2	4	
	W4	C206-C500	#4	2'-6"	5'-0"	6"	6	2	
	W5	D204-D501	#5	2'-4"	5'-1"	3"	12	2	

BENDING DIAGRAM

(DIMENSIONS ARE OUT TO OUT)

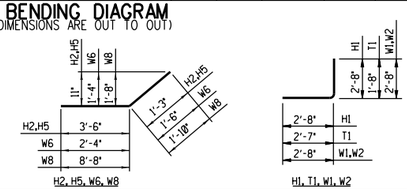

EST. WT. OF REINFORCING STEEL = 1,075.39 + (7.72 X Z) + (39.63 X N) LB.

REINFORCING SCHEDULE - 6'-6" HEADWALL

PIPE DIAMETER = 60" SIDE SLOPE = 2:1

	BAR DESIGNATION	TOTAL	MARK	SIZE	LENGTH	SHAPE
PHASE 1	T1	A	C403B	#4	4'-3"	
	T2	6		#4	Q	
PHASE 2	A1	B	D1008	#5	10'-8"	
	A5	4		#5	Q	
	A6	2		#5	R	
	H1	B	D504B	#5	5'-4"	
	H2	E	D503B	#5	5'-3"	
	W1	18	C504B	#4	5'-4"	
	W2	36	D504B	#5	5'-4"	
PHASE 3	H3	B	D603	#5	6'-3"	
	H4	14		#5	T	
	H5	E	D503B	#5	5'-3"	
	W6	28	D310B	#5	3'-10"	
	W7	8	D1007	#5	10'-7"	
	W8	4	D1300B	#5	13'-0"	

SET LIST

	BAR DESIGNATION	MARK	SIZE	MIN. LENGTH	MAX. LENGTH	INCREMENT	NO.OF BARS/SET	NO.OF SETS	SHAPE
PHASE 2	A2	D205-D904	#5	2'-5"	9'-4"	1'-8 13/16"(-)	5	4	
	A3		#5	U	V	1'-1 7/8"(-)	10	1	
	A4		#5	U	V	6 15/16"(-)	19	1	
PHASE 3	W3	C502-C909	#4	5'-2"	9'-9"	2'-3 11/16"(+)	3	4	
	W4	C206-C600	#4	2'-6"	6'-0"	6"	8	2	
	W5	D204-D601	#5	2'-4"	6'-1"	3"	16	2	

BENDING DIAGRAM

(DIMENSIONS ARE OUT TO OUT)

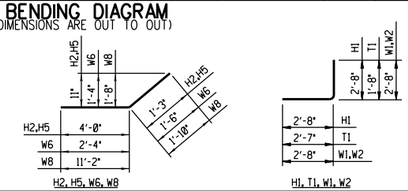

EST. WT. OF REINFORCING STEEL = 1,458.14 + (8.93 X Z) + (43.81 X N) LB.

REINFORCING SCHEDULE - 7'-6" HEADWALL

PIPE DIAMETER = 72" SIDE SLOPE = 2:1

	BAR DESIGNATION	TOTAL	MARK	SIZE	LENGTH	SHAPE
PHASE 1	T1	A	C403B	#4	4'-3"	
	T2	6		#4	Q	
PHASE 2	A1	B	D1208	#5	12'-8"	
	A5	4		#5	Q	
	A6	2		#5	R	
	H1	B	D504B	#5	5'-4"	
	H2	E	D509B	#5	5'-9"	
	W1	22	C504B	#4	5'-4"	
	W2	44	D504B	#5	5'-4"	
PHASE 3	H3	B	D703	#5	7'-3"	
	H4	16		#5	T	
	H5	E	D509B	#5	5'-9"	
	W6	32	D310B	#5	3'-10"	
	W7	8	D1211	#5	12'-11"	
	W8	4	D1506B	#5	15'-6"	

SET LIST

	BAR DESIGNATION	MARK	SIZE	MIN. LENGTH	MAX. LENGTH	INCREMENT	NO.OF BARS/SET	NO.OF SETS	SHAPE
PHASE 2	A2	D208-D1104	#5	2'-8"	11'-4"	1'-8 13/16"(-)	6	4	
	A3		#5	U	V	1'-1 7/8"(-)	12	1	
	A4		#5	U	V	6 15/16"(-)	23	1	
PHASE 3	W3	C502-C1201	#4	5'-2"	12'-1"	2'-3 11/16"(+)	4	4	
	W4	C206-C700	#4	2'-6"	7'-0"	6"	10	2	
	W5	D204-D701	#5	2'-4"	7'-1"	3"	20	2	

BENDING DIAGRAM

(DIMENSIONS ARE OUT TO OUT)

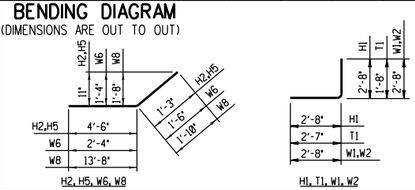

EST. WT. OF REINFORCING STEEL = 1,861.91 + (10.15 X Z) + (47.98 X N) LB.

CONCRETE QUANTITIES

H	TOEWALL CU. YD.	APRON CU. YD.	HEADWALL & WINGWALLS CU. YD.	TOTAL CU. YD.
3'-6"	0.471 +(0.006 x Z)	0.834 + (0.016 x Z)	0.856 + (0.011 x Z)	2.17 + (0.033 x Z)
4'-0"	0.556 +(0.006 x Z)	1.134 + (0.019 x Z)	1.198 + (0.012 x Z)	2.89 + (0.037 x Z)
4'-6"	0.642 +(0.006 x Z)	1.476 + (0.022 x Z)	1.583 + (0.014 x Z)	3.70 + (0.042 x Z)
5'-6"	0.813 +(0.006 x Z)	2.289 + (0.028 x Z)	2.481 + (0.017 x Z)	5.59 + (0.051 x Z)
6'-6"	0.984 +(0.006 x Z)	3.272 + (0.034 x Z)	3.550 + (0.020 x Z)	7.81 + (0.060 x Z)
7'-6"	1.155 +(0.006 x Z)	4.427 + (0.040 x Z)	4.790 + (0.023 x Z)	10.38 + (0.069 x Z)

EQUATIONS FOR VARIABLES:

D = PIPE DIAMETER (INCHES)
N = NUMBER OF PIPES
S = SPACING BETWEEN ADJACENT PIPES (INCHES)
SS = SIDE SLOPE (RUN PER FOOT OF RISE)

HEADWALL DIMENSIONS

Y = SS x (H - 24)
Z = ΣD + ΣS + 12
= (N x D) + [S x (N - 1)] + 12 (FOR CONSTANT D AND S)
XL = Z + (1.155 x Y)
W = XL + 34.641
DIMENSIONS ARE IN INCHES.
ROUND DIMENSIONS TO NEAREST 1/8".

TOTAL NUMBER OF BARS

A = (2 x M) + (4 x TB) + 10
B = (2 x M) + 6
E = 4 x N
M = Z / 12
TB = [(W - Z) / 24] - 1.510
ROUND NUMBER OF BARS DOWN TO NEAREST INTEGER.

LENGTH OF BARS

Q = W - 4
R = Z + 19.63
T = Z + 12.63
U = Z + 26.556
V = W - 8.083
BAR LENGTHS ARE IN INCHES.
ROUND BAR LENGTHS DOWN TO NEAREST WHOLE INCH.

FOR VALUES OF H, D AND Y, SEE FRAMING DETAILS, SHEET NO. AM1.

REINFORCING BAR LEGEND:

A - APRON BARS
H - HEADWALL BARS
T - TOEWALL BARS
W - WINGWALL BARS

A2 AND W3 CAN BE EITHER SINGLE BAR OR BAR SET.
W3 NOT REQUIRED IN 3'-6" HEADWALL.

NOTES:

1. QUANTITIES ARE FOR ONE HEADWALL ONLY.
2. BAR DESIGNATIONS CONSIST OF BAR SIZE & LENGTH FOLLOWED BY THE LETTER "B" IF BENT. BAR SIZES ARE REPRESENTED BY THE LETTERS A THROUGH L CORRESPONDING TO BAR SIZE #2 THROUGH #18. BAR LENGTHS ARE GIVEN IN FEET AND INCHES: THE LAST TWO DIGITS ARE INCHES.
3. CONCRETE VOLUME FOR HEADWALL ASSUMES SOLID WALL WITHOUT A PIPE. TO DETERMINE REQUIRED CONCRETE QUANTITY, SUBTRACT THE APPLICABLE PIPE VOLUME AS FOLLOWS:

24" DIA. = 0.11 CU. YD.
30" DIA. = 0.18 CU. YD.
36" DIA. = 0.26 CU. YD.
48" DIA. = 0.46 CU. YD.
60" DIA. = 0.72 CU. YD.
72" DIA. = 1.04 CU. YD.

REV.	DATE	DESCRIPTION	DES.	ENG.
X	XX-XX-XX	REVISION	XX	XX

DRAWN BY: SCRRA DATE: 03/31/2011

ASSISTANT DIRECTOR: STANDARDS & DESIGN

DIRECTOR OF ENGINEERING AND CONSTRUCTION

METROLINK®
SOUTHERN CALIFORNIA REGIONAL RAIL AUTHORITY
ONE GATEWAY PLAZA, 12TH FLOOR, L. A., CA. 90012

ENGINEERING STANDARDS

TYPE A–M HEADWALL
REINFORCING SCHEDULE

STANDARD 6310
SCALE: NONE
REVISION –
SHEET 3 OF 3
CADD FILE: ES6310–03

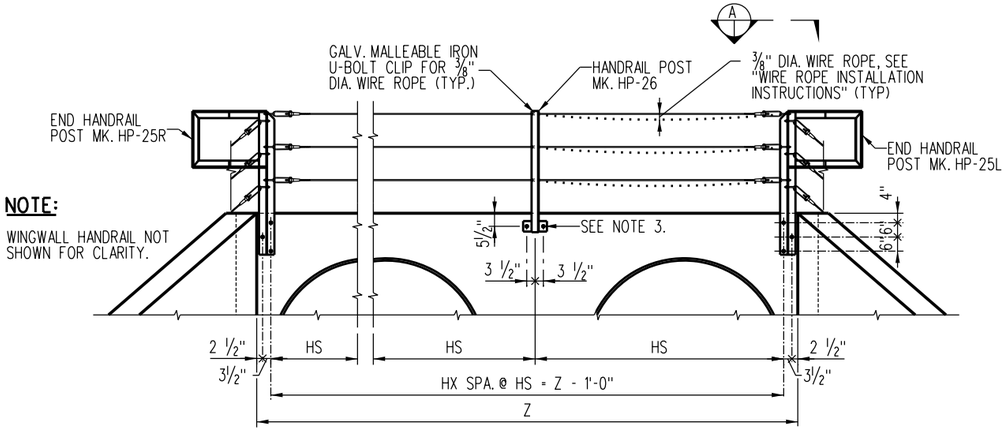

NOTE:

WINGWALL HANDRAIL NOT SHOWN FOR CLARITY.

HEADWALL HANDRAIL LAYOUT

SCALE: 1/2"=1'-0"

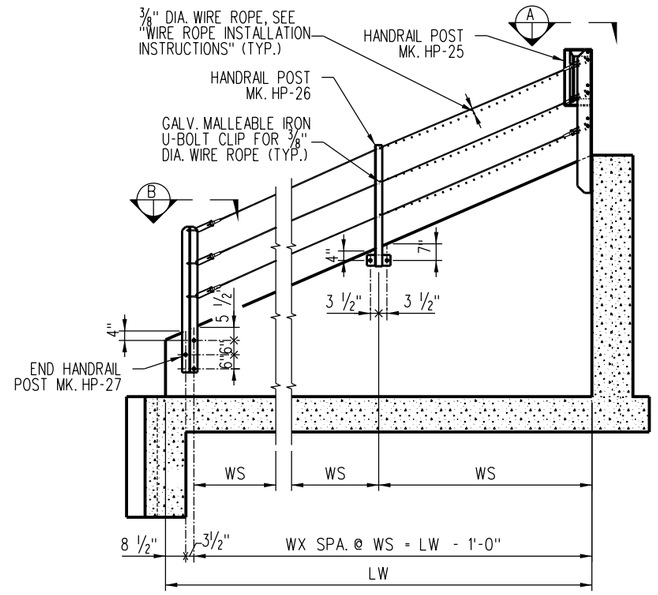

WINGWALL HANDRAIL LAYOUT

SCALE: 1/2"=1'-0"

(LOOKING PERPENDICULAR TO FACE OF WINGWALL)

HEADWALL NOTES:

1. VARIABLE "Z" IS AS DEFINED BY HEADWALL FRAMING DETAILS.
2. HX = NUMBER OF HANDRAIL SPACES ON HEADWALL
   = (Z - 12) / 120 (ROUND UP TO NEXT WHOLE NUMBER)
3. HS = HANDRAIL SPACING ON HEADWALL (INCHES)
   = (Z - 12) / HX
4. HRL = WIRE ROPE LENGTH FOR HEADWALL (INCHES)
   = Z + 60 (ROUND UP TO NEXT WHOLE NUMBER)
5. BL = BOLT LENGTH
   = 14" (TYPE A-1, A-2, A-3 AND A-M)
   = 17" (TYPE D-1, D-M)

WINGWALL NOTES:

1. VARIABLE "Y" IS AS DEFINED BY HEADWALL FRAMING DETAILS.
2. LW = LENGTH OF WINGWALL (INCHES)
   = 1.155 x Y
3. WX = NUMBER OF HANDRAIL SPACES ON WINGWALL
   = (LW - 12) / 120 (ROUND UP TO NEXT WHOLE NUMBER)
4. WS = HANDRAIL SPACING ON WINGWALL (INCHES)
   = (LW - 12) / WX
5. WRL = WIRE ROPE LENGTH FOR WINGWALL (INCHES)
   = (1.09 x LW) + 60 (ROUND UP TO NEXT WHOLE NUMBER)
6. BL = BOLT LENGTH
   = 14" (TYPE A-1, A-2, A-3 AND A-M)
   = 17" (TYPE D-1, D-M)

WIRE ROPE INSTALLATION INSTRUCTIONS:

1. THREAD WIRE ROPE THROUGH ALL CLIPS AND BARREL ANCHORS AND SEAT RETAINING WEDGES ON ONE END HANDRAIL POST.
2. STRETCH WIRE ROPE, HANG A MINIMUM OF 10 LB. ON CABLE BETWEEN TWO POSTS AND REMOVE ALL SAG TO A MAXIMUM OF 2 INCHES.
3. SEAT RETAINING WEDGES AT REMAINING END HANDRAIL POST.
4. REMOVE WEIGHTS.
5. TIGHTEN CLIPS AT INTERMEDIATE POSTS.
6. CUT & REMOVE EXCESS WIRE ROPE, COAT CUT PORTIONS OF WIRE ROPE WITH COLD GALVANIZING COMPOUND.

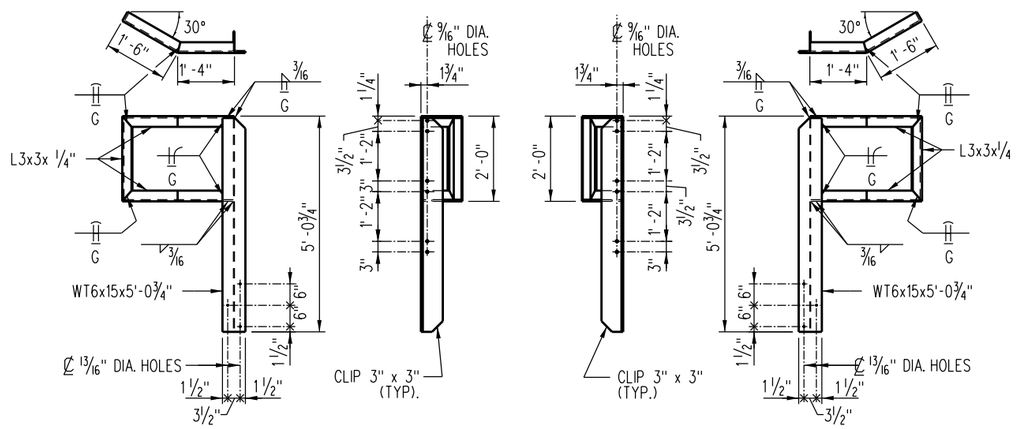

HANDRAIL POST MK. HP-25L

SCALE: 3/4"=1'-0"

EST. WT. = 113 LB. EACH
GLAVANIZE AFTER FABRICATION

HANDRAIL POST MK. HP-25R

SCALE: 3/4"=1'-0"

EST. WT. = 113 LB. EACH
GALVANIZE AFTER FABRICATION

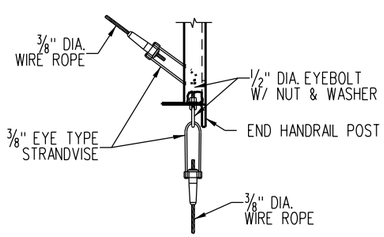

VIEW A
SCALE: 1 1/2"=1'-0"

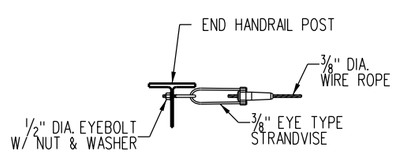

VIEW B
SCALE: 1 1/2"=1'-0"

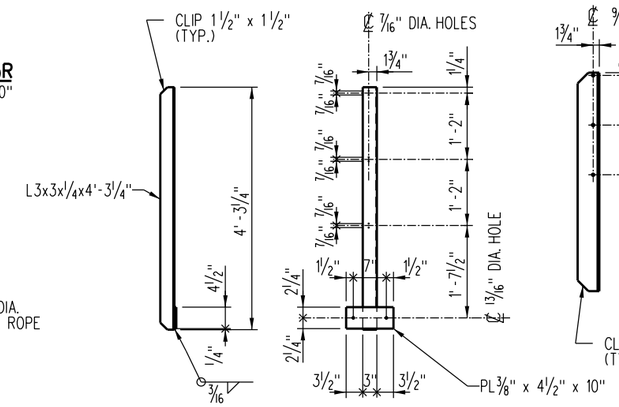

HANDRAIL POST MK. HP-26

SCALE: 1"=1'-0"

EST. WT. = 25.7 LB. EACH
GALVANIZE AFTER FABRICATION

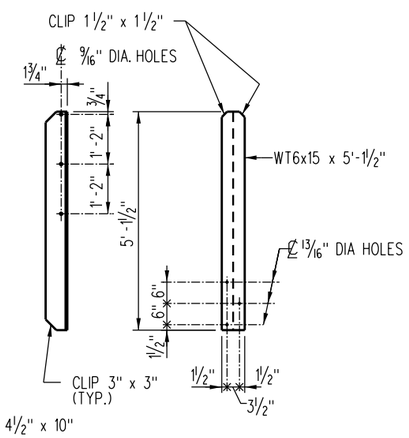

HANDRAIL POST MK. HP-27

SCALE: 3/4"=1'-0"

EST. WT. = 76.9 LB. EACH
GALVANIZE AFTER FABRICATION

STEEL SPECIFICATIONS:

DESIGN AND WORKMANSHIP - PER CURRENT AREMA MANUAL FOR RAILWAY ENGINEERING.
MISCELLANEOUS STEEL - PER CURRENT ASTM A36 SPECIFICATIONS UNLESS OTHERWISE NOTED.
STEEL COATING - PICKLE PER SSPC NO. 8 AND HOT-DIPPED GALVANIZED PER CURRENT ASTM A123.
COATING WEIGHT 2.3 OZ. PER SQ. FT. BOLTS AND NUTS TO BE ZINC COATED.
WELDING - SAW OR SMAW PROCESS PER CURRENT AREMA MANUAL FOR RAILROAD ENGINEERING AND AWS D1.1 STRUCTURAL WELDING CODE.

NOTES:

1. FOR HANDRAIL POLICY, SEE SHEET ES6301.
2. FIELD DRILL OR CAST 7/8" DIA. HOLE AND INSTALL 3/4" DIA. x BL A307 BOLT WITH WASHER AND LOCKNUT (TYP.)

REV.	DATE	DESCRIPTION	DES.	ENG.
X	XX-XX-XX	REVISION	XX	XX

DRAWN BY: SCRRA DATE: 03/31/2011

ASSISTANT DIRECTOR: STANDARDS & DESIGN

DIRECTOR OF ENGINEERING AND CONSTRUCTION

METROLINK®
SOUTHERN CALIFORNIA REGIONAL RAIL AUTHORITY
ONE GATEWAY PLAZA, 12TH FLOOR, L. A., CA. 90012

ENGINEERING STANDARDS

HANDRAIL LAYOUT AND DETAILS

STANDARD 6330
SCALE: AS NOTED
REVISION –
SHEET 1 OF 1
CADD FILE: ES6330

TABLE 1 - ROUND SMOOTH STEEL PIPE (SSP)					
OUTSIDE PIPE DIAMETER	THICKNESS (IN.)	WEIGHT (LB./FT.)	COVER *		20'-0" LENGTH
			MIN. (FT.)	MAX (FT.)	WEIGHT (LB.)
12"	3/16	24	1'-6"	18'-0"	480
18"	1/4	48	1'-6"	18'-0"	960
21"	5/16	69	1'-6"	18'-0"	1,380
24"	5/16	80	1'-6"	18'-0"	1,600
30"	3/8	119	1'-6"	18'-0"	2,380
36"	1/2	190	1'-6"	18'-0"	3,800
42"	1/2	222	1'-6"	18'-0"	4,440
48"	5/8	317	1'-6"	18'-0"	6,340
60"	3/4	475	1'-6"	18'-0"	9,500
72"	7/8	666	1'-6"	18'-0"	13,320
* COVER TO BE MEASURED FROM BASE OF RAIL TO TOP OF PIPE					

TABLE 2 - ROUND CORRUGATED STEEL PIPE (CSP)							
INSIDE PIPE DIAMETER	GAGE	THICKNESS (IN.)	WEIGHT (LB./FT.)	COVER *		20'-0" LENGTH	CONNECTING BANDS
				MIN. (FT.)	MAX. (FT.)	WEIGHT (LB.)	GAGE
12"	14	0.079	12	1'-6"	18'-0"	240	16
18"	14	0.079	18	1'-6"	18'-0"	360	16
21"	14	0.079	21	1'-6"	18'-0"	420	16
24"	14	0.079	24	1'-6"	18'-0"	480	16
30"	14	0.079	30	1'-6"	18'-0"	600	16
36"	14	0.079	41	2'-6"	18'-0"	820	16
42"	14	0.079	47	2'-6"	18'-0"	940	16
48"	12	0.109	74	2'-6"	18'-0"	1,480	14
60"	12	0.109	92	2'-6"	18'-0"	1,840	14
72"	10	0.138	140	3'-6"	18'-0"	2,800	12
* COVER TO BE MEASURED FROM BASE OF RAIL TO TOP OF PIPE							

CONSTRUCTION NOTES

GENERAL:

THESE STRUCTURES ARE DESIGNED FOR COOPER E80 LIVE LOAD WITH IMPACT, AND COVER AS SHOWN IN TABLE 1 AND TABLE 2.

TABLE 1 INDICATES THE MINIMUM REQUIRED THICKNESS FOR STRUCTURAL STABILITY.

INSTALLATION:

INSTALLATION OF SMOOTH STEEL PIPE (SSP) SHALL CONFORM TO THE CURRENT AMERICAN RAILWAY ENGINEERING AND MAINTENANCE-OF-WAY ASSOCIATION (AREMA) MANUAL FOR RAILWAY ENGINEERING, CHAPTER 1, PART 4. CULVERT LENGTHS ARE TO BE BASED ON STANDARD MAINLINE ROADBED SECTIONS.

MATERIALS:

PIPE SHALL BE IN ACCORDANCE WITH ASTM INTERNATIONAL A139. PIPE TO BE GRADE B AND STEEL SHALL HAVE A MINIMUM YIELD STRENGTH OF 35 KSI. A HYDROSTATIC TEST IS NOT REQUIRED.

SMOOTH STEEL PIPE SHALL HAVE A WELDED STRAIGHT LONGITUDINAL SEAM. THE ENDS OF EACH SECTION OF PIPE SHALL BE SQUARE CUT. ONE END SHALL BE SUITABLY BEVELED FOR FIELD WELDING SECTIONS TOGETHER.

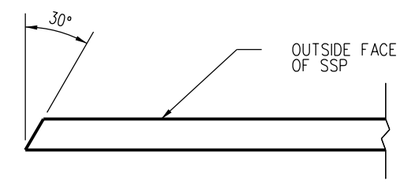

PIPE END BEVEL DETAIL

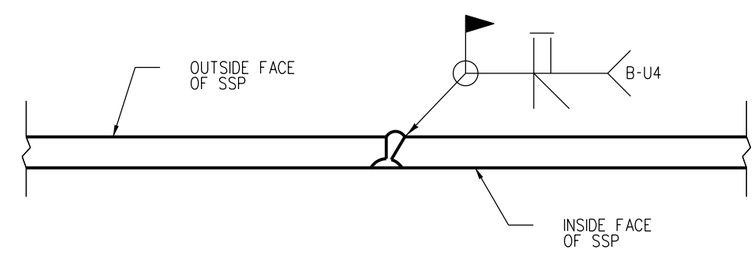

PIPE END WELD DETAIL

REV.	DATE	DESCRIPTION	DES.	ENG.
X	XX-XX-XX	REVISION	XX	XX

DRAWN BY: SCRRA DATE: 03/31/2011

ASSISTANT DIRECTOR: STANDARDS & DESIGN

DIRECTOR OF ENGINEERING AND CONSTRUCTION

METROLINK®
SOUTHERN CALIFORNIA REGIONAL RAIL AUTHORITY
ONE GATEWAY PLAZA, 12TH FLOOR, L. A., CA. 90012

ENGINEERING STANDARDS

CONSTRUCTION NOTES AND TABLE FOR SMOOTH AND CORRUGATED STEEL PIPE CULVERTS

STANDARD 6340
SCALE: NONE
REVISION –
SHEET 1 OF 1
CADD FILE: ES6340